Exist ground right side of ditch
Exist 'conc. box' plan R-343
Trans. structure – see sheet 2
Remove as required for const
Trim end of 15" pipe as required. Const. junction see detail below
Exist Flow Line of lined ditch / exist conc. encased sewer
Const 63" R.C.P or 60" R.C.P.
Const 54" R.C.P or 57" R.C.P.
SLOPE = .0075
11+77.08 end trans structure
FL = 83.48
6+44.99 ℄ Pine Street ℄
8" steel pipe
15" C.M.P.
T.C. left of ditch
42" conc. pipe
9+39.20 ℄ Pine St. ℄C.
Exist 42" pipe
S = .0116
Twin 57" R.C.P.
Const type "C" structure
Flow line 73.42
Flow line 92" pipe-plan D-56
S = .0050
Trans. structure – see sheet 2
FL = 75.06 – 19+20.22 begin trans
FL = 77.06 – 19+35.22 end const
11+62.08 end exist box
FL = 69.37
Trans 60" to 63"
180' 63" R.C.P.
60" R.C.P.
300' 54" R.C.P.
54" R.C.P.
Trans 57" to 60"
57" R.C.P.
Trans 57" to 54"
17+42.56 ℄
TEQUESQUITE AVE.
PP 12439-J
Existing Curb See C/R plan R-422
Exist S.D pipe C/R plan D-56
PALM AVE.
Begin const 11+62.08
LOT 5
TRACT 2175
LOT 4
LOT 6
LOT 3
PINE STREET EXTENSION
Exist curb – see C/R plan R-343
Abandoned sewer line remove as necessary for const. of pipe, plug ends.
Exist 15" CMP
Exist 8'x5' conc. box
Remove exist gunnite trans structure – see detail for disposition of exist steel
Const. trans. structure – 63" & 54" R.C.P to exist 8'x5' conc. box – see sheet 2 for const details
Exist sanitary sewer system See C/R plan S-262
see section below 13+70.08
60" & 63" R.C.P
57" & 54" R.C.P
USE 1200-D UNDER DRIVEWAYS OR CASE I BEDDING C/R STD 425 452
USE 1200-D UNDER DRIVEWAY OR CASE I BEDDING STD 452
Property line omitted for clarification beyond this point – see section below
12' Storm drain easement
SEE D26P FOR UPDATE ON STORM DRAIN
Steel Schedule
'A' bars = N° 5 at 6" o.c
'B' bars = N° 5 at 6" o.c
'C' bars = N° 5 at 9" o.c
'F' bars = N° 5 at 9" o.c
all tie bars to be N° 3 at 18" o.c.
Const. junction struct. C/R std. 422 – 57" to 63" R.C.P.
Elev "S" = 75.70
Elev "R" = 75.77
Type 'C' Structure
A = 45°
B = 42"
C = 6'-0"
D1 = 54"
D2 = 60"
E = 12'-0"
L = 15'-0"
Curve Data – ℄
R = 225.00'
Δ = 25° 30' 00"
L = 100.14'
T = 50.91'
Remove exist. rubble and conc. trans. structure
Const. trans. structure – single 92" to twin 57" R.C.P. – See sheet 2 for Const. details
3.44
3.12
5'
20'
33'
35' D/w
35' D/w
3665'
NORTH
BC 17+80.58
EC = 18+80.72
End const 19+35.22 = 6.173 6" D-56
12' easement for storm drain
Property line
Center line Exist ditch
13.00'
5.00'
3.65'
5'
Exist curb w/6" cf
Parkway slope 1/4" per 1'
Future paved area 2.5% ±
Future C/R std sidewalk
min clear = .75'
0.23'
Note maintain min 10' clear between outside edges of pipe
Remove exist. rubble lined ditch
63" R.C.P.
60" R.C.P.
54" R.C.P.
6.71' Center Line to Center Line const.
NOTE: Sand backfill shall be placed around all pipes, to top of both pipes.
Pipe bedding per Std N° 452 – case III
SECTION THRU PIPE AT STATION 13+70.08 THIS SECTION TYPICAL FROM STATION 11+77.00 TO 17+39.00
SCALE 1" = 2'
Bend steel bars into conc collar
Trim end of pipe to match inside of R.C.P.
Exist. C.M.P.
6"
6"
63" R.C.P.
DETAIL OF JUNCTION OF 15" C.M.P & 63" R.C.P

ENGINEERS NOTES

1. All construction shall be in accordance with City of Riverside Std Specs N° 461
2. R.C.P. to be bedded per Case III, Std. 452
3. R.C.P. to be ~~1200~~-D min. OR 1000 D
4. All conc. used shall be Class-A.
5. It shall be the responsibility of the contractor to clear the right-of-way in accordance with the provisions of the law as it affects each utility, including irrigation lines and appurtenances and at no extra cost to the city.
6. B.M. = RR Spike in PP 12439-J – NE'ly corner Pine & Tequesquite Elev = 785.61

B.D. GILBERT – CIVIL ENGINEER
R.C.E. 9586
SAN BERNARDINO, CALIFORNIA
Approved B.D. Gilbert Date 6-28-62

CITY OF RIVERSIDE, CALIFORNIA
DEPARTMENT OF PUBLIC WORKS

STORM DRAIN PLAN & PROFILE
TEQUESQUITE DRAIN
NO 2

SCALE 1"=40' HORZ 1"=4' VERT.

MARK	DATE	DESCRIPTION
Δ	8-6-62	"as built" pipe lengths

Designed by d.r.b
Drawn by d.r.b.
Checked by
Recommended by A.R. Thrash
Approved by
Date 7-16-62

NO. D-82
Sheet 1 of 2

INKED

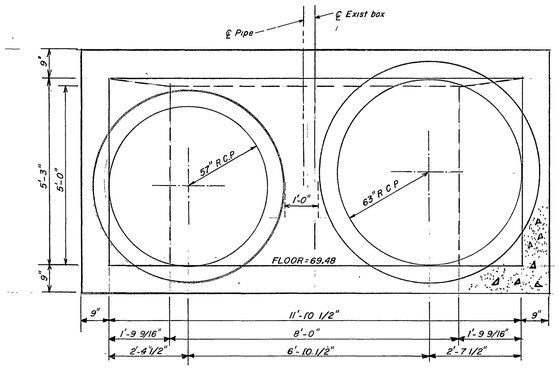

SECTION THROUGH TRANSITION AT Ⓓ-Ⓓ SCALE 1/2"=1'0"

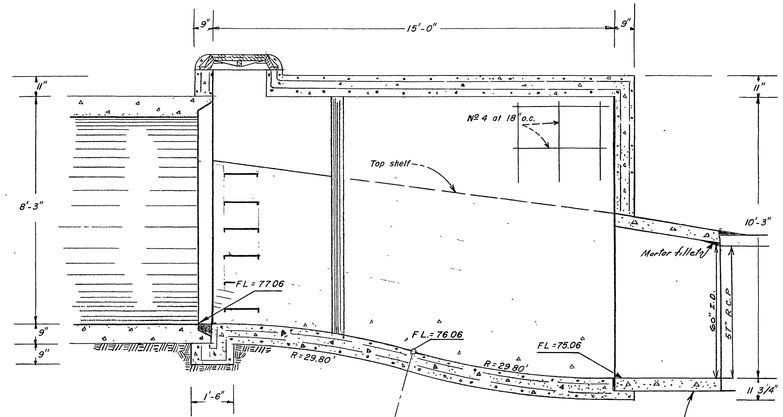

SECTION THROUGH TRANSITION AT SECTION Ⓑ-Ⓑ ALONG ℄ OF 92" R.C.P

NOTE – For details not shown see State of California Standard Single Box Culvert 12' x 10' A.

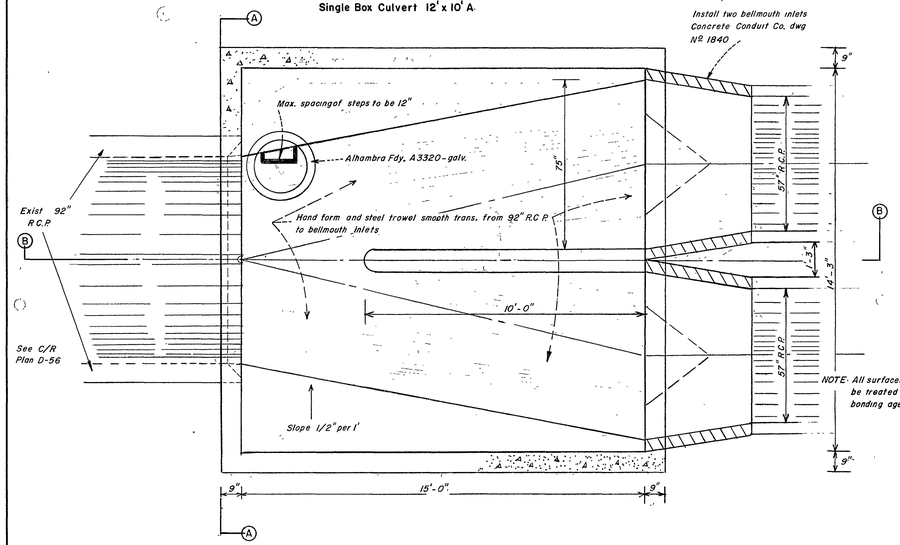

PLAN VIEW – TRANSITION STRUCTURE – SINGLE 92" TO TWIN 57"
SCALE 3/8" = 1'-0"

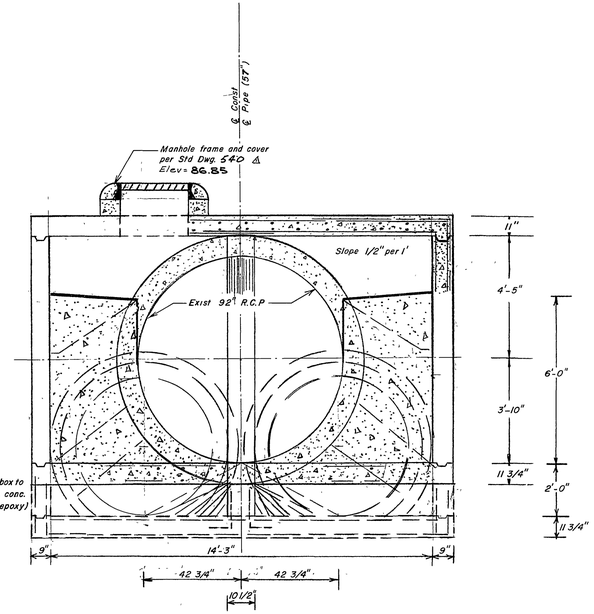

NOTE- All surfaces of box to be treated with conc. bonding agent (epoxy)

SECTION THROUGH TRANSITION AT SECTION Ⓐ-Ⓐ
SCALE 3/8"=1'-0"

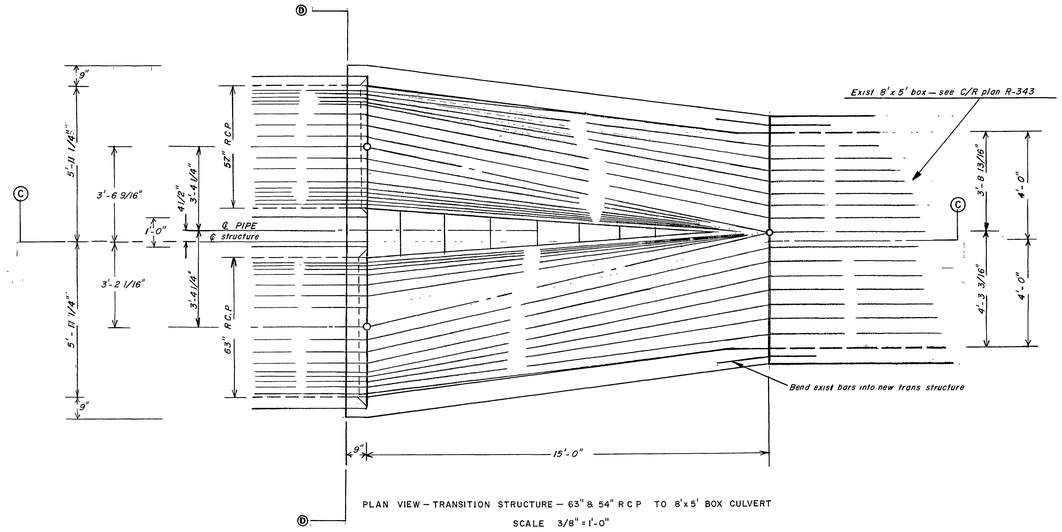

PLAN VIEW – TRANSITION STRUCTURE – 63" & 54" R C P TO 8'x5' BOX CULVERT
SCALE 3/8" = 1'-0"

NOTE – For details not shown see State of California Standard Single Box Culvert 12' x 6' A

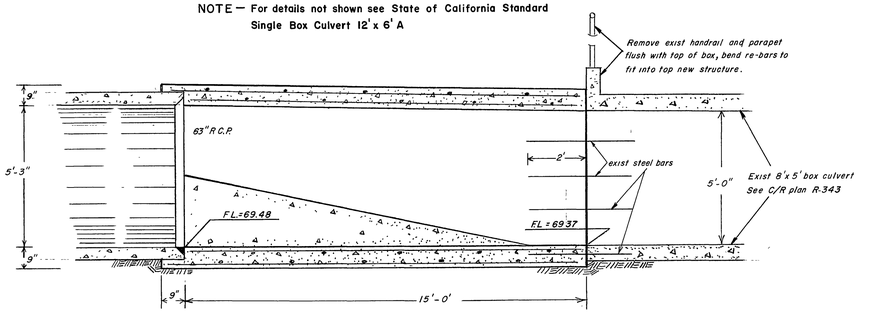

SECTION THROUGH TRANSTION AT Ⓒ-Ⓒ ALONG ℄ OF STRUCTURE
SCALE 3/8"=1'-0"

B.D. GILBERT – CIVIL ENGINEER
R.C.E. 9586
SAN BERNARDINO, CALIFORNIA
Approved B. D. Gilbert Date 6-29-62

CITY OF RIVERSIDE, CALIFORNIA
DEPARTMENT OF PUBLIC WORKS

MARK	DATE	DESCRIPTION
△	8-13-62	CHANGED MH STD №2

STRUCTURE DETAILS
TEQUESQUITE DRAIN
NO. 2

Scale – As noted

Designed by J.S | Checked by W.D.S
Drawn by J.S D.B
Recommended by A.R. Thiel

Approved by J.M. Martinez
Director of P.W. Dept.
Date 7-16-62

NO. D-82
Sheet 2 of 2