RIVERSIDE COUNTY FLOOD CONTROL AND WATER CONSERVATION DISTRICT

LEGEND

ANCHOR & POLE
CATCH BASIN
CULVERT WITH HEADWALLS
FENCE (NOT CHAIN LINK) — X —
FENCE (CHAIN LINK TO BE CONST.)
FENCE (CHAIN LINK EXIST.)
FIRE HYDRANT
GAS LINE — G2 —
GAS METER
MANHOLE
POWER POLE
RIGHT OF WAY LINE (FLOOD CONTROL) — R/W —
SANITARY SEWER — SS8 —
STORM DRAIN — SD18 —
STREET RIGHT OF WAY
TEMPORARY CONST. EASEMENT — T.C.E —
WALL – BLOCK OR MASONRY
WATER LINE — W4 —
WATER METER
WATER VALVE
TRAFFIC SIGNAL CONDUIT — SIG. —
TELEPHONE — T —

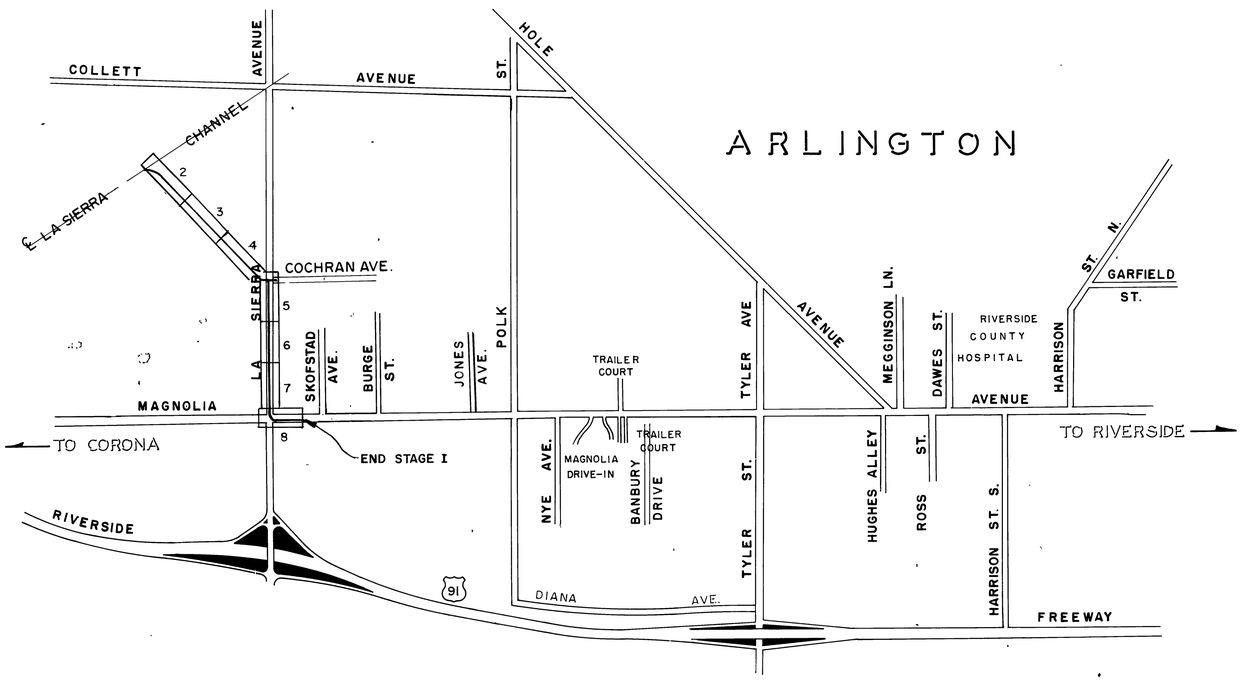

800' 0 800 FEET

ABBREVIATIONS

C.B.	CATCH BASIN
C.M.P.	CORRUGATED METAL PIPE
J.S	JUNCTION STRUCTURE
M.H.	MANHOLE
P.C.C.	POINT OF COMPOUND CURVE
P.I.	POINT OF INTERSECTION
P.R.C.	POINT OF REVERSE CURVE
R.C.B.	REINFORCED CONCRETE BOX
R.C.P.	REINFORCED CONCRETE PIPE
T.S.	TRANSITION STRUCTURE
T.C.	TELEPHONE CABLE
SIG.	TRAFFIC SIGNAL
M.T.D.	MULTIPLE TILE DUCTING
ABND	ABANDONED
E.P.	EDGE OF PAVING

GENERAL NOTES

1. Elevations shown are in feet above the U.S.G.S. mean sea level datum.
2. Stations shown on drawings are along center line of conduit or on a line normal to center line of conduit.
3. Stations and invert elevations of pipe inlets shown on the profiles are at the inside face of the conduit unless otherwise shown.
4. Ties for catch basins as shown on the drawings are from curb return to center line of catch basin, unless otherwise shown.
5. Curb face (C.F.) shown on the general plan pertains to the curb face at the catch basin opening.
6. Locations of catch basin connector pipe junctions with catch basins as shown on the drawings are schematic. It is intended that such junctions be located at the downstream ends of the catch basins unless otherwise shown. In all cases the exact locations will be determined in the field by the engineer to meet field conditions.
7. Existing utilities shall be maintained in place by the contractor unless otherwise noted.
8. Locations shown on the plans for existing sanitary sewer house connections are approximate only.
9. All openings resulting from the cutting or partial removal of existing culverts, pipes or similar structures shall be sealed with 8 inches of brick and mortar or 6 inches of concrete, unless otherwise shown
10. All resurfacing, curbs, gutters, sidewalks, driveways and other existing improvements to be reconstructed shall be constructed at the same elevation and location as the existing improvements, unless otherwise noted.
11. For Right of Way Data refer to Record of Survey Book 55 pages 96,97

INDEX

INDEXED

RIVERSIDE COUNTY FLOOD CONTROL AND WATER CONSERVATION DISTRICT

LA SIERRA CHANNEL
MAGNOLIA DRAIN
STAGE I

LEGEND, ABBREVIATIONS, MAP & GENERAL NOTES

Approved: John V. Bouvier, Chief Engineer R.E. No. 8822	Designed: J.H. & B.G.	Sheet No. 1 of 32
	Drawn: R.L. Porter	Dwg. No. 1-247
Date: 7-4-70	Checked:	
	Date Drawn: 1968	

PROJECT NO. 1-0-062
AS BUILT

D-210

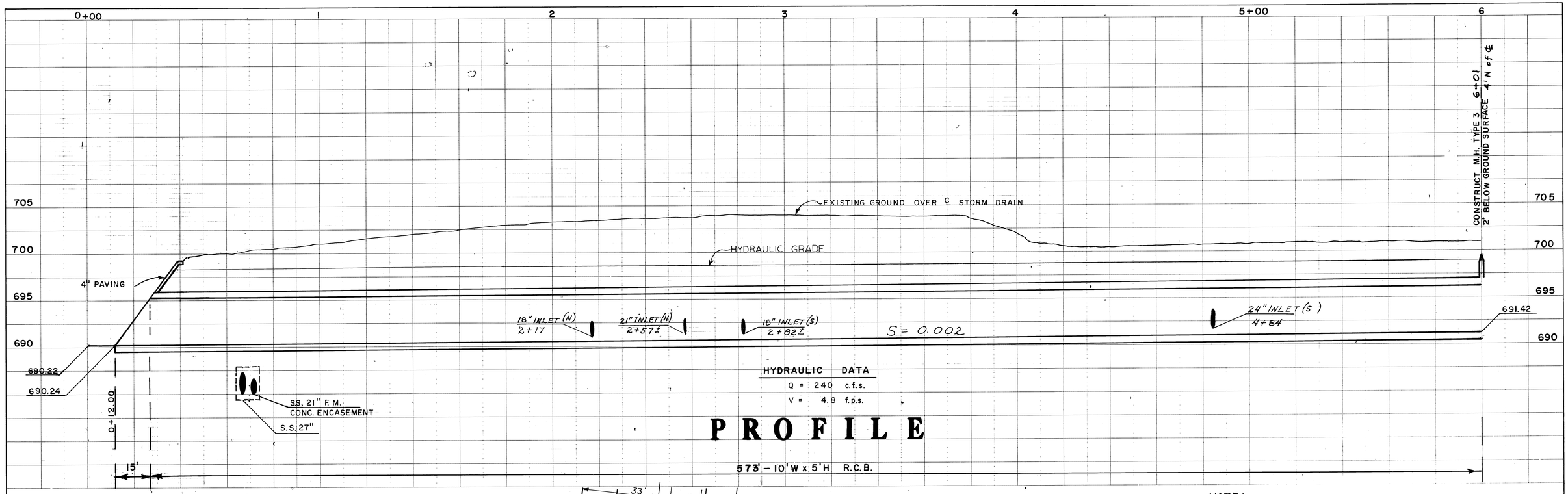

NOTE:
Street And SS Lines were added on Nov. 11 1976
Refer to Encroachment Permit 1-0-062-354 Plans.

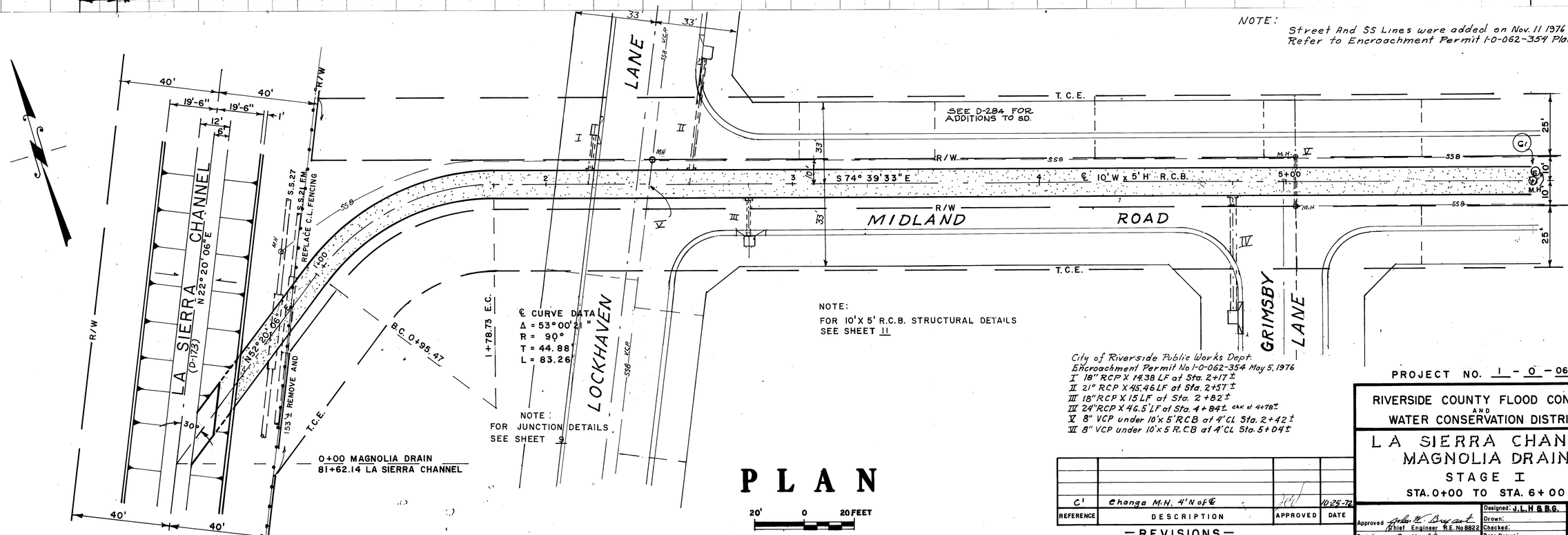

City of Riverside Public Works Dept.
Encroachment Permit No 1-0-062-354 May 5, 1976
I 18" RCP X 14.38 LF at Sta. 2+17±
II 21" RCP X 45.46 LF at Sta. 2+57±
III 18" RCP X 15 LF at Sta. 2+82±
IV 24" RCP X 46.5' LF at Sta. 4+84± CMP at 4+78±
V 8" VCP under 10' x 5' RCB at 4' CL Sta. 2+42±
VI 8" VCP under 10' x 5 R.C.B at 4' CL Sta. 5+04±

REFERENCE	DESCRIPTION	APPROVED	DATE
C'	Change M.H. 4' N of ℄		10-25-72

—REVISIONS—
AS BUILT

PROJECT NO. 1 - 0 - 062

RIVERSIDE COUNTY FLOOD CONTROL
AND
WATER CONSERVATION DISTRICT

LA SIERRA CHANNEL
MAGNOLIA DRAIN
STAGE I
STA. 0+00 TO STA. 6+00

Approved John W. Bryant Chief Engineer R.E. No 8822 Date: 7-4-75	Designed: J.L.H & B.G. Drawn: Checked: Date Drawn:	Sheet No 2 of 32 Dwg. No 1-247

D-210

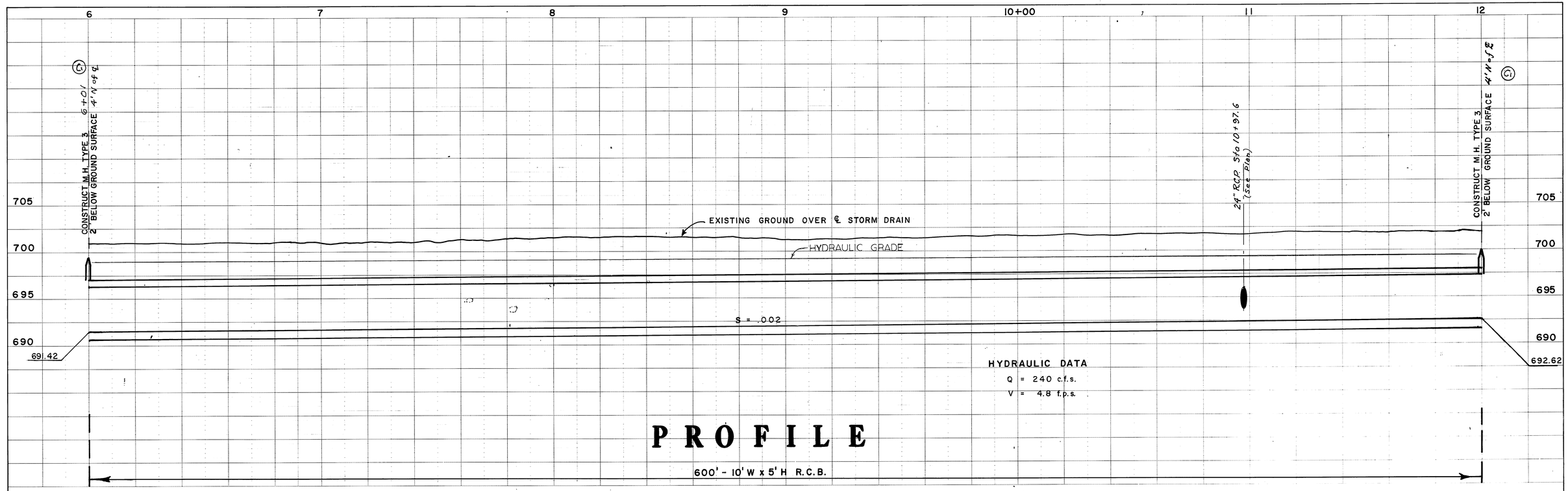

NOTE: Street & SS Lines added Nov 11 1976
Refer to Encroachment Permit No. 1-0-062-354 - Plans

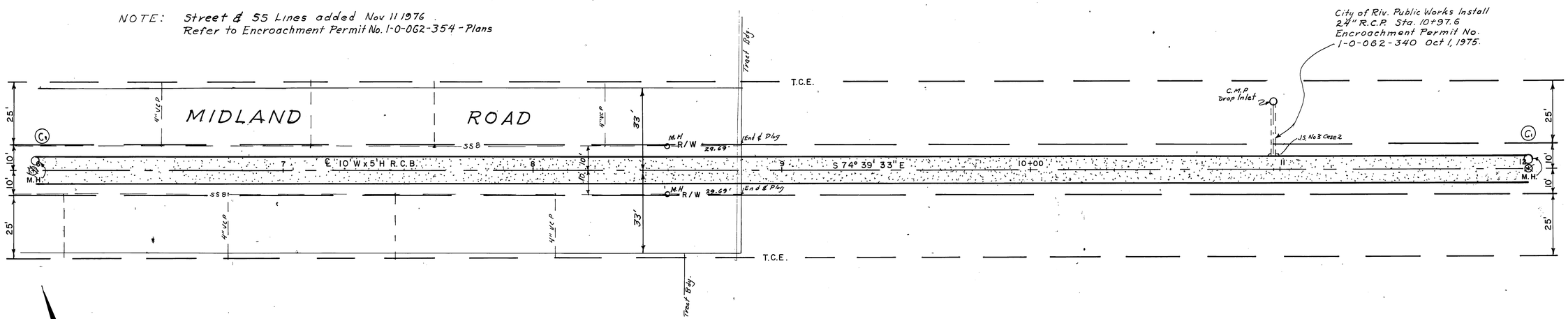

PLAN

20' 0 20 FEET

REFERENCE	DESCRIPTION	APPROVED	DATE
C'	Change M.H. 4' N of ℄		

— REVISIONS —
AS BUILT

PROJECT NO. 1 - 0 - 062

RIVERSIDE COUNTY FLOOD CONTROL AND WATER CONSERVATION DISTRICT

LA SIERRA CHANNEL
MAGNOLIA DRAIN
STAGE I
STA. 6+00 TO STA. 12+00

Approved: John R. Bryant
Chief Engineer R.E. No 8822
Date: 7-14-78

Designed: J.L.H. & B.G.
Drawn:
Checked:
Date Drawn:

Sheet No 3 of 32
Dwg. No 1-247

D-210

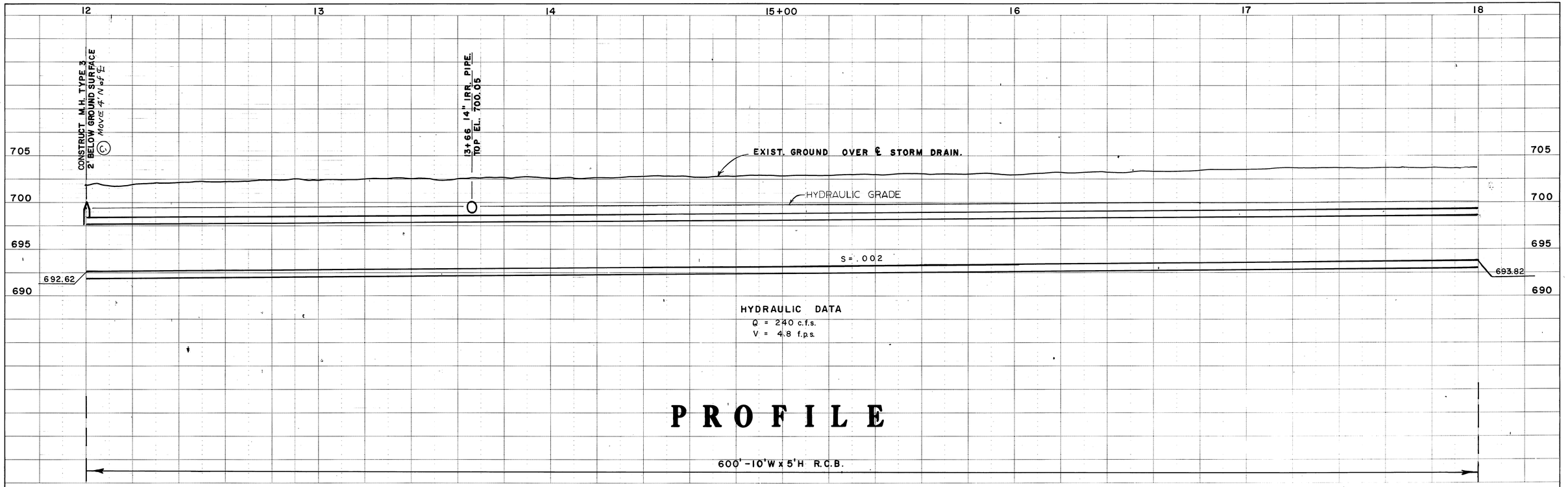

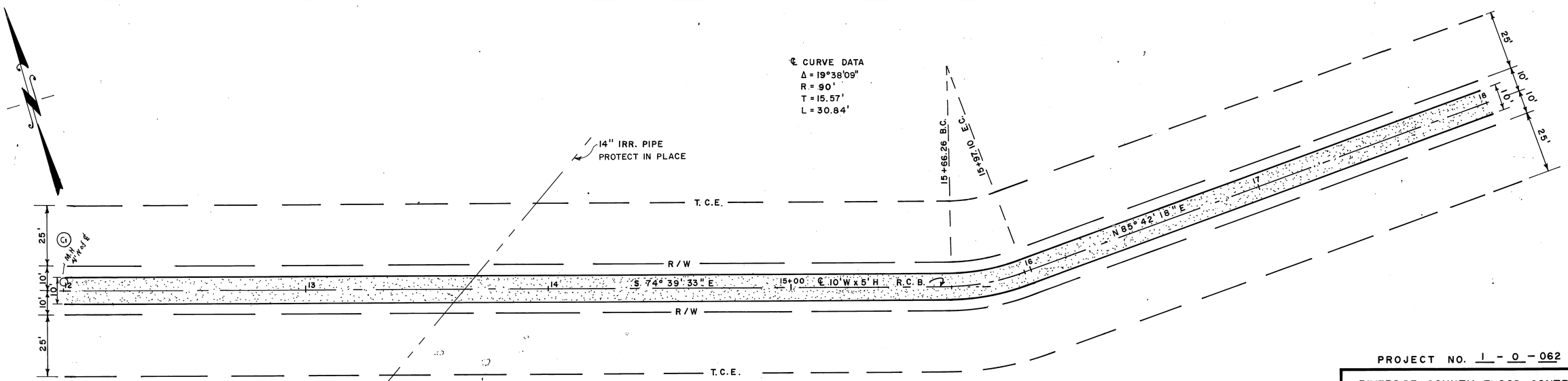

PLAN

20' 0 20 FEET

REFERENCE	DESCRIPTION	APPROVED	DATE
C1	Change M.H. 3.5' N of ℄		

— REVISIONS —
AS BUILT

PROJECT NO. 1 - 0 - 062

RIVERSIDE COUNTY FLOOD CONTROL AND WATER CONSERVATION DISTRICT

LA SIERRA CHANNEL
MAGNOLIA DRAIN
STAGE I
STA. 12+00 TO STA. 18+00

Approved John W. Bryant
Chief Engineer R.E. No 8822
Date: 9-4-70

Designed: J.L.H. B.G.
Drawn:
Checked:
Date Drawn: JULY 1970

Sheet No 4 of 32
Dwg. No 1-247

D-210

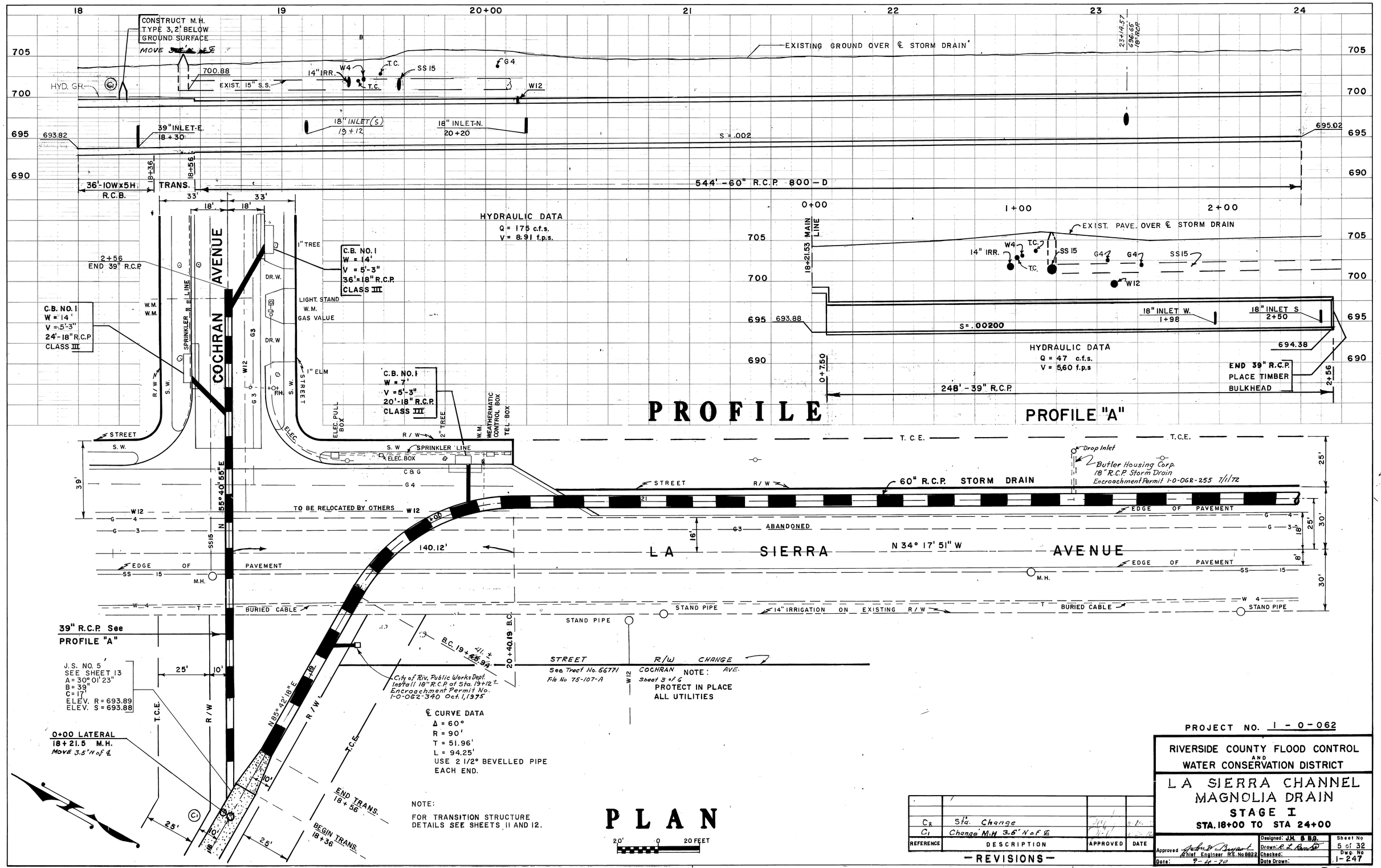

REFERENCE	DESCRIPTION	APPROVED	DATE
C2	Sta. Change		
C1	Change M.H. 3.6' N of ℄		

— REVISIONS —

AS BUILT

PROJECT NO. 1-0-062

RIVERSIDE COUNTY FLOOD CONTROL AND WATER CONSERVATION DISTRICT

LA SIERRA CHANNEL
MAGNOLIA DRAIN
STAGE I
STA. 18+00 TO STA 24+00

Approved: John H. Bryant, Chief Engineer R.E. No 8822
Date: 9-4-72
Designed: J.H. & B.B.
Drawn: R. L. Barnes
Checked:
Date Drawn:
Sheet No 5 of 32
Dwg. No 1-247

D-210

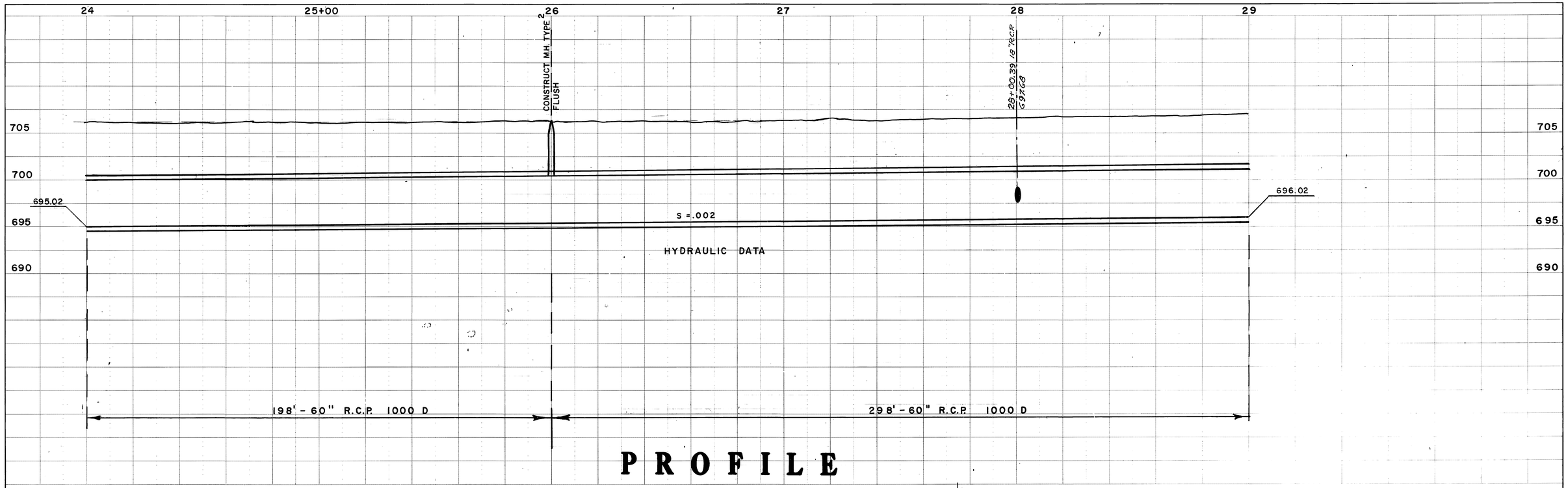

PROFILE

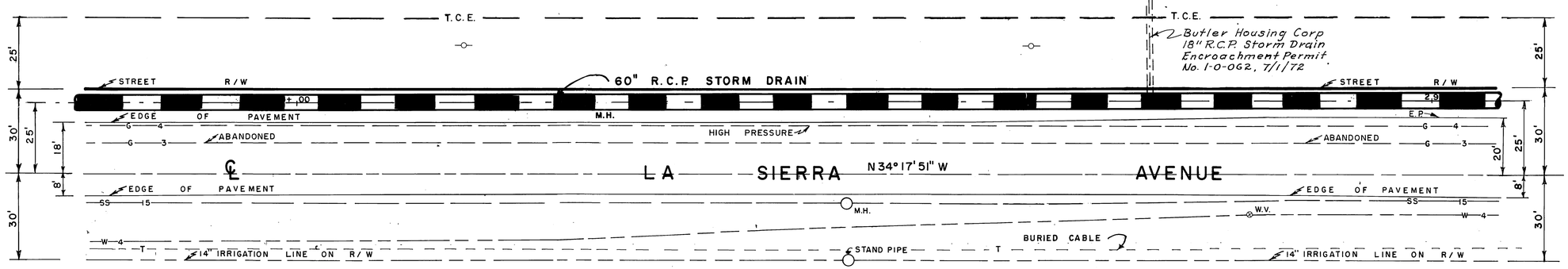

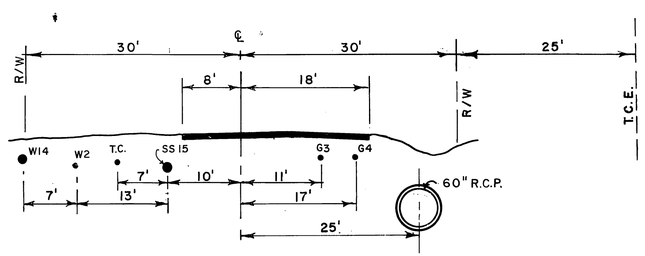

CROSS SECTION
STA. 25+00

10' 0 10 FEET

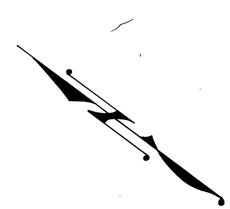

PLAN

20' 0 20' FEET

REFERENCE	DESCRIPTION	APPROVED	DATE

— REVISIONS —
AS BUILT

PROJECT NO. 1 - 0 - 062

RIVERSIDE COUNTY FLOOD CONTROL AND WATER CONSERVATION DISTRICT

LA SIERRA CHANNEL
MAGNOLIA DRAIN
STAGE I

STA. 24+00 TO STA. 29+00

Approved: John W. Bryant
Chief Engineer R.E. No 8822
Date: 9-4-70

Designed: J.H.S. B.G.
Drawn: R. L. Ramos
Checked:
Date Drawn:

Sheet No 6 of 32
Dwg. No 1-247

D-210

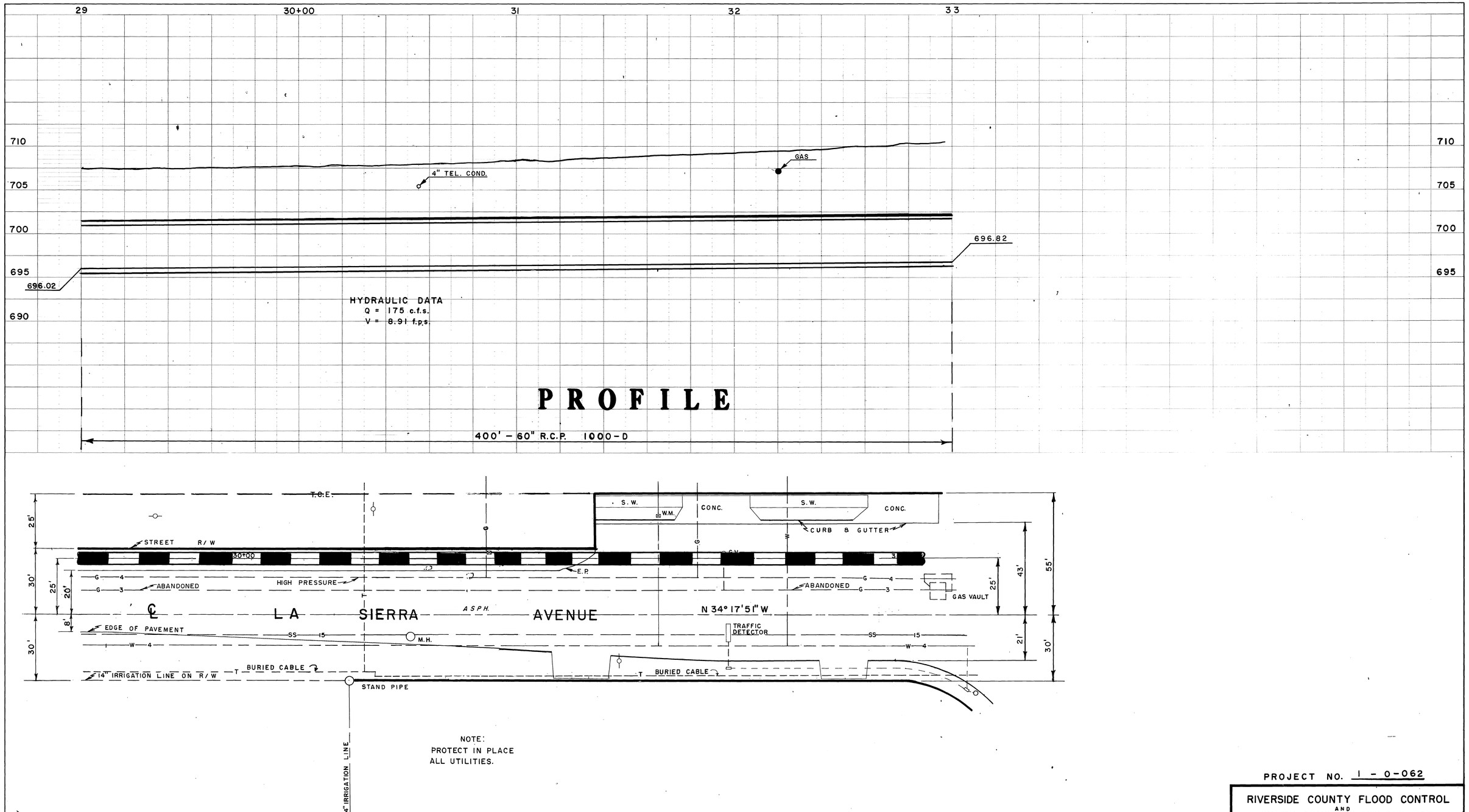

PROJECT NO. 1 - 0-062

RIVERSIDE COUNTY FLOOD CONTROL AND WATER CONSERVATION DISTRICT

LA SIERRA CHANNEL
MAGNOLIA DRAIN
STAGE I
STA. 29+00 TO STA. 33+00

REFERENCE	DESCRIPTION	APPROVED	DATE

— REVISIONS —
AS BUILT

Approved: John W. Bryant, Chief Engineer R.E. No 8822
Date: 7-4-70

Designed: J.H. & B.G.
Drawn: R. L. Barto
Checked:
Date Drawn:

Sheet No 7 of 32
Dwg. No 1-247

D-210

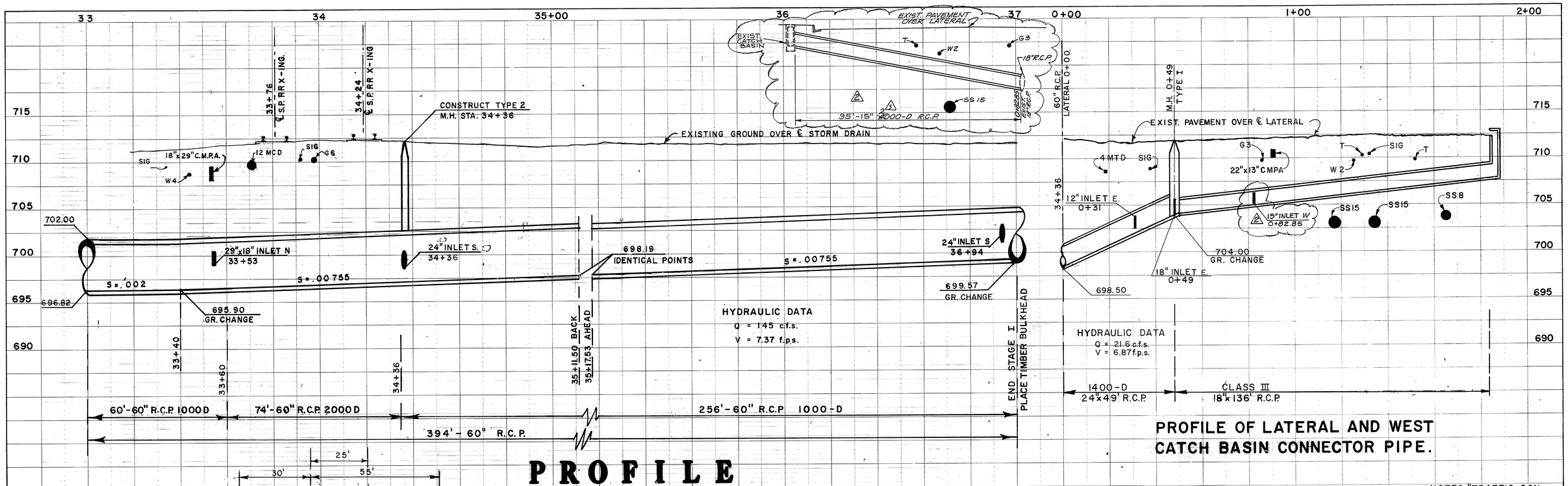

PROFILE OF LATERAL AND WEST CATCH BASIN CONNECTOR PIPE.

PROFILE

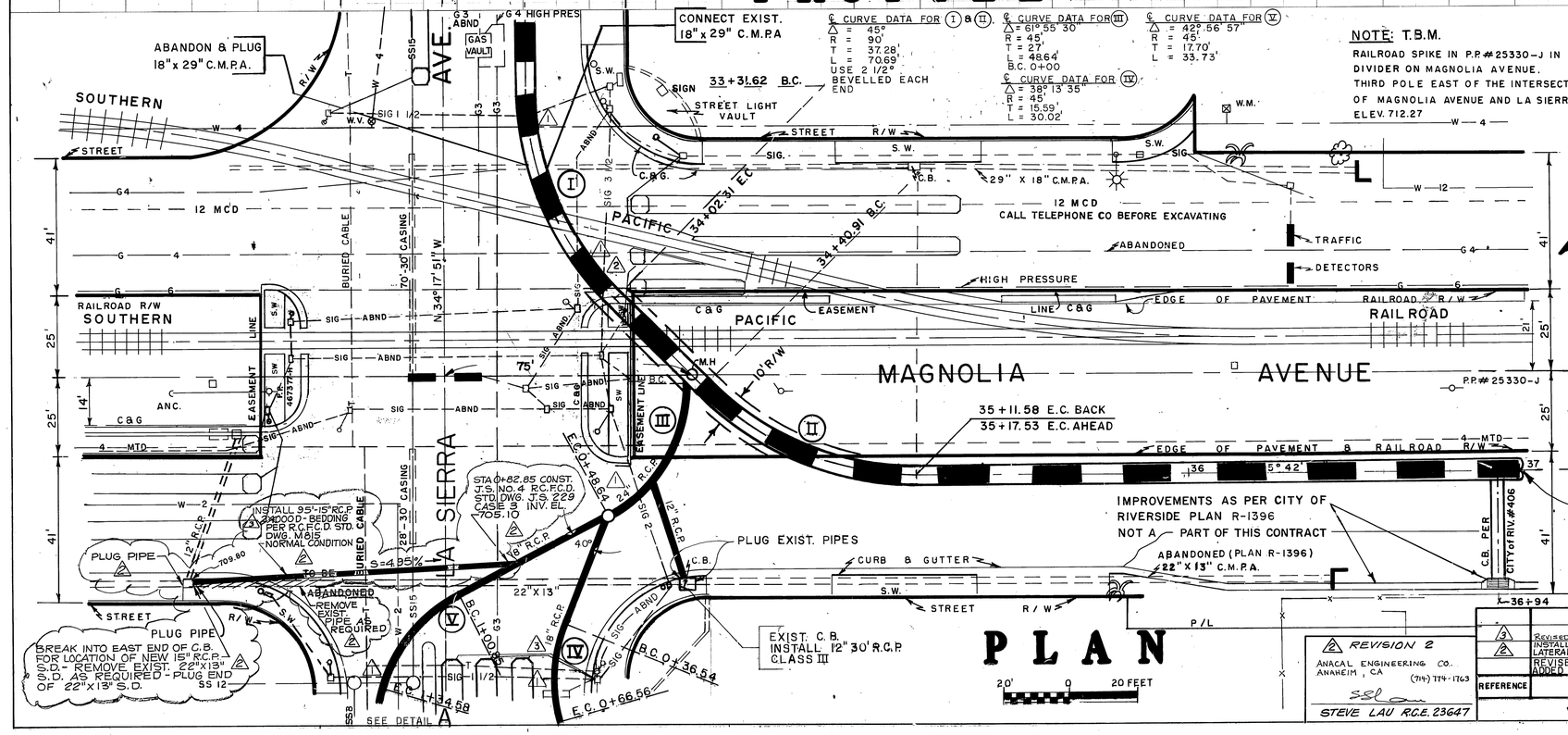

PLAN

NOTE: T.B.M.
RAILROAD SPIKE IN P.P.# 25330-J IN DIVIDER ON MAGNOLIA AVENUE. THIRD POLE EAST OF THE INTERSECTION OF MAGNOLIA AVENUE AND LA SIERRA AVENUE. ELEV. 712.27

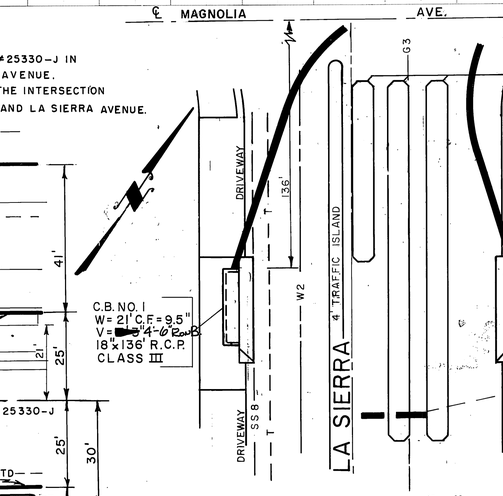

NOTES: "TRAFFIC CONTROL FACILITIES"
1. PROTECT CONDUIT IN PLACE.
2. NOTIFY THE CITY TRAFFIC ENGINEER, PHONE 787-7366, AT LEAST 24 HRS. PRIOR TO WORK HERE. THE CITY FORCES WILL LIFT TRAFFIC LOOP LEADS, REMOVE PULL BOX & CONDUIT TO CLEAR 60" R.C.P. INSTALLATION & RESTORE TRAFFIC FACILITIES.
3. THE CONTRACTOR SHALL PROTECT TRAFFIC LOOP LEADS IN PLACE AS DIRECTED BY THE ENGINEER.
4. THE CONTRACTOR SHALL RELOCATE THE 1 1/2" CONDUIT TO CLEAR THE C.B. AS DIRECTED BY THE ENGINEER. WIRES TO BE INSTALLED BY OTHERS.

NOTE:
PROTECT IN PLACE ALL UTILITIES. CALL SO. CAL. GAS CO. BEFORE EXCAVATING IN VICINITY OF H.P. G6 LINE

DETAIL "A"

REVISION 2
ANACAL ENGINEERING CO.
ANAHEIM, CA
(714) 774-1763
STEVE LAU R.C.E. 23647

REFERENCE	DESCRIPTION	APPROVED	DATE
3	Revised 1" strength of Rev. 2 18" C.B.	KLCR	1/25/65
2	INSTALL 15" R.C.P. S.D. FROM EXIST. C.B. TO EXIST. LATERAL. CONSTRUCT J.S. REMOVE ABN'D S.D.		2-13-84
	REVISED CONNECTOR PIPE PLAN & PROFILE ADDED NOTES "TRAFFIC CONTROL FACILITIES"		11/19/70

— REVISIONS —

AS BUILT See Sh. 8A

*As built 7/6/87 TE

PROJECT NO. 1 - 0 - 062

RIVERSIDE COUNTY FLOOD CONTROL AND WATER CONSERVATION DISTRICT

LA SIERRA CHANNEL
MAGNOLIA DRAIN
STAGE I
STA. 33+00 TO STA. 37+00

Approved: John W. Prescott, Chief Engineer R.E. No. 8822
Date: 7-9-70
Designed: J.H. & B.G.
Drawn: R. L. Rankin
Checked:
Date Drawn:
Sheet No. 8 of 32
Dwg. No. 1-247

D-210

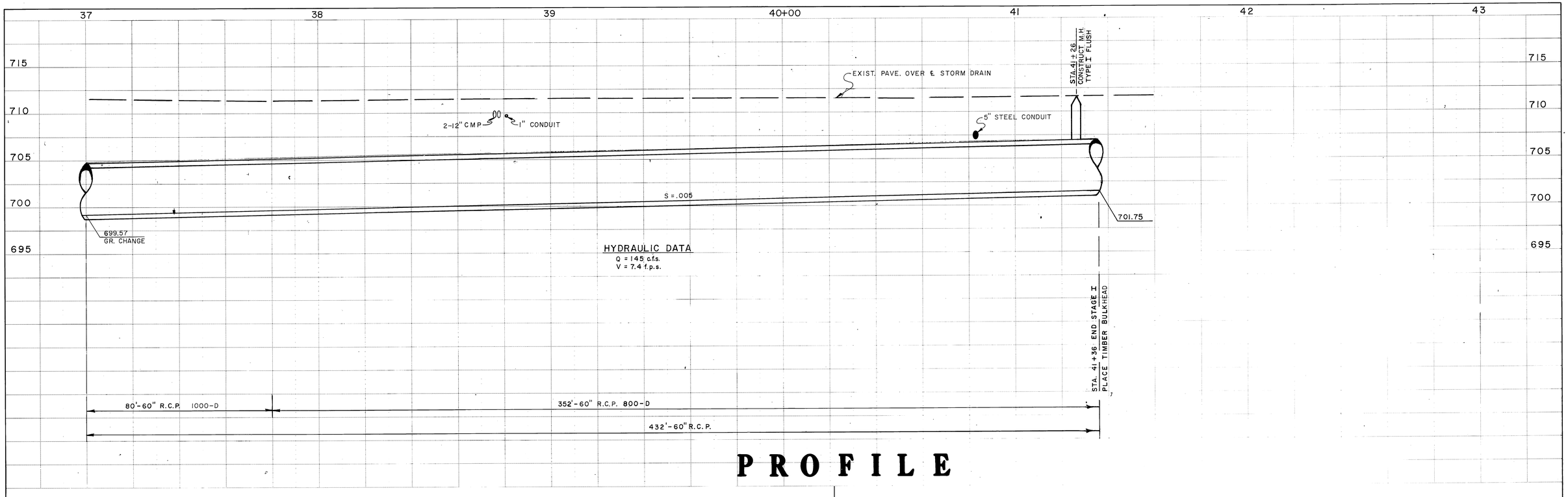

PROFILE

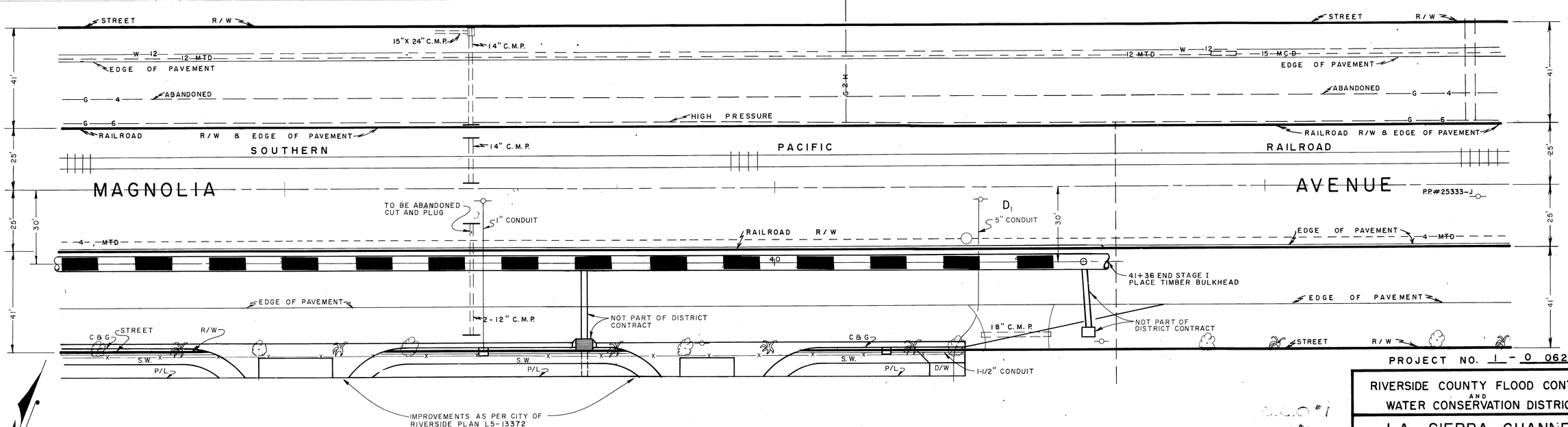

PLAN

20' 0 20 FEET

NOTE:

T.B.M.

RAILROAD SPIKE IN P.P.# 25333-J LOCATED IN DIVIDER ON MAGNOLIA AVENUE ELEV. 712.61.

REFERENCE	DESCRIPTION	APPROVED	DATE
D1	ADDED 5" STEEL CONDUIT	dmm	1/14/61
	ADDED SH. 8A TO STAGE I		

— REVISIONS —

AS BUILT

PROJECT NO. 1 - 0 062

RIVERSIDE COUNTY FLOOD CONTROL AND WATER CONSERVATION DISTRICT

LA SIERRA CHANNEL

MAGNOLIA DRAIN

STAGE I

STA. 37+00 TO STA. 41+33

Approved: John M. Bryant, Chief Engineer - R.E. No 8822

Date: 12-7-70

Designed: J.H. & B.G.

Drawn: R. L. Barto

Checked:

Date Drawn:

Sheet No 8A

Dwg. No 1-247

D-210

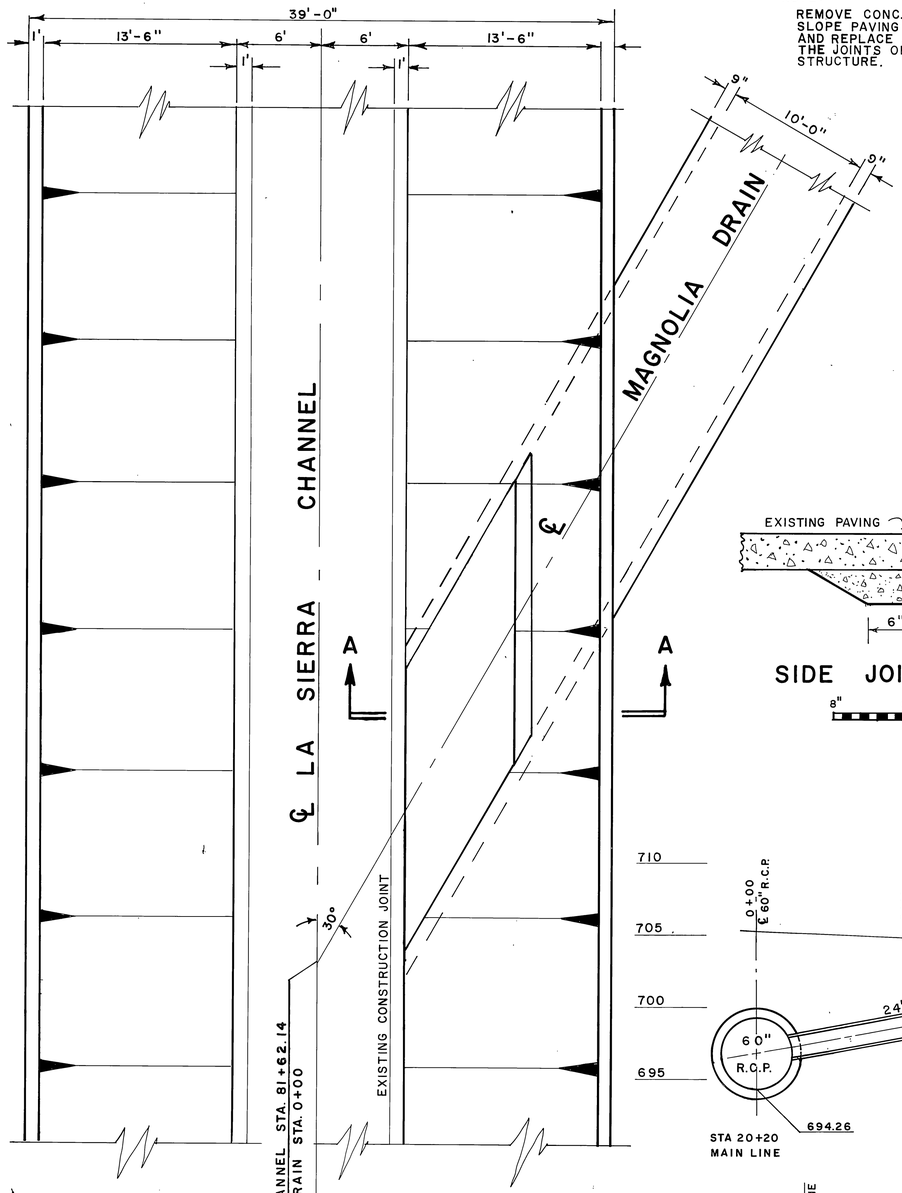

PLAN

5' 0 5'

NOTE:

REMOVE CONC. CHANNEL SIDE SLOPE PAVING TO NEAREST JOINTS AND REPLACE AS SHOWN BETWEEN THE JOINTS OF THE JUNCTION STRUCTURE.

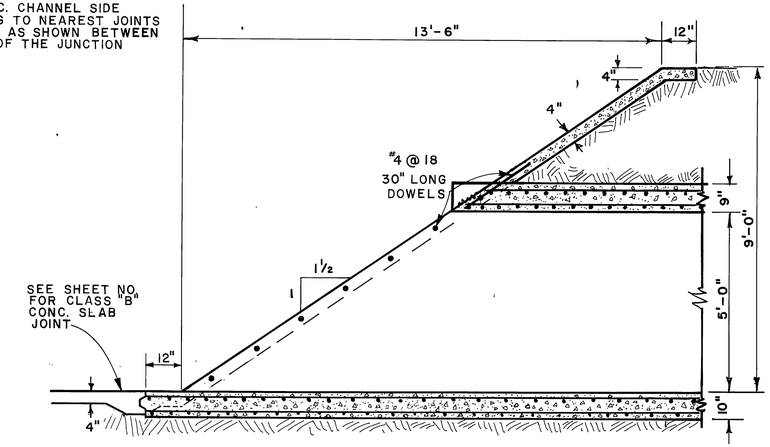

SECTION A-A

2' 1' 0 2'

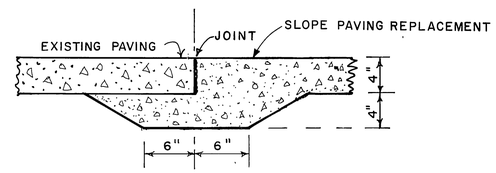

SIDE JOINT DETAIL

8" 0 8"

NOTE:

CONST. SIDEWALK 3⅝" THICK CLASS "B" CONC. SLOPE & FINISH TO MATCH EXISTING.

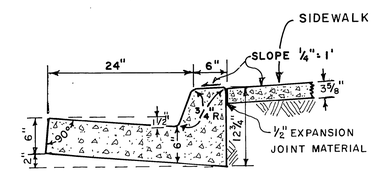

STANDARD CURB GUTTER

NOT TO SCALE

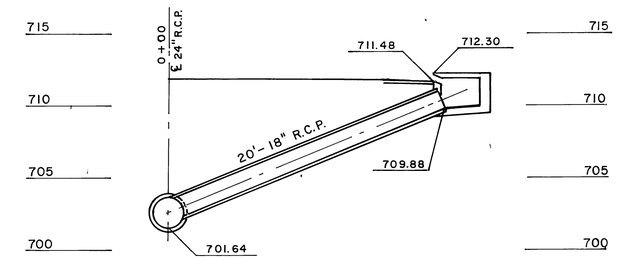

STA. 0+55
24" R.C.P.

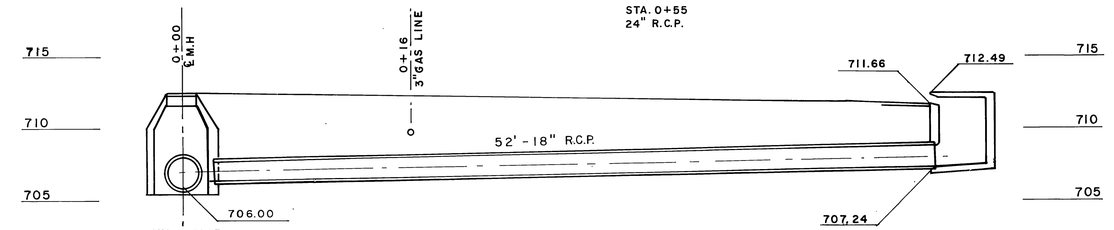

STA. 1+31.35
24" R.C.P.

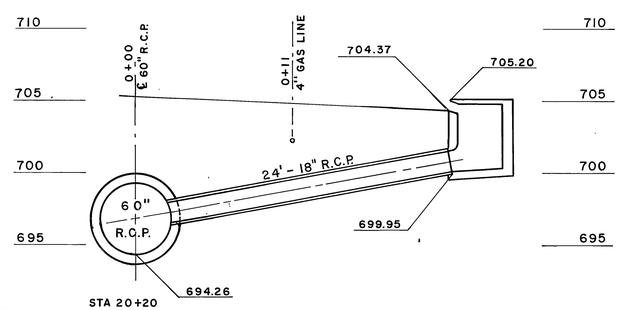

STA 20+20
MAIN LINE

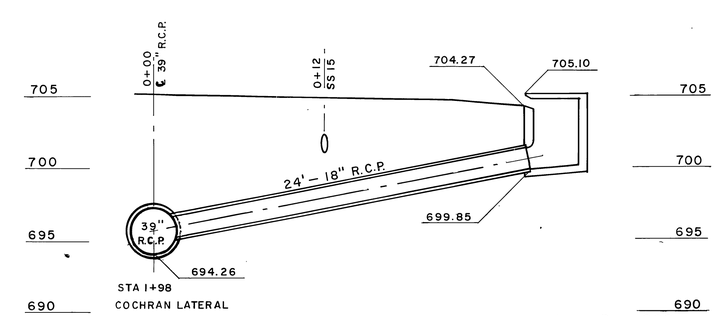

STA 1+98
COCHRAN LATERAL

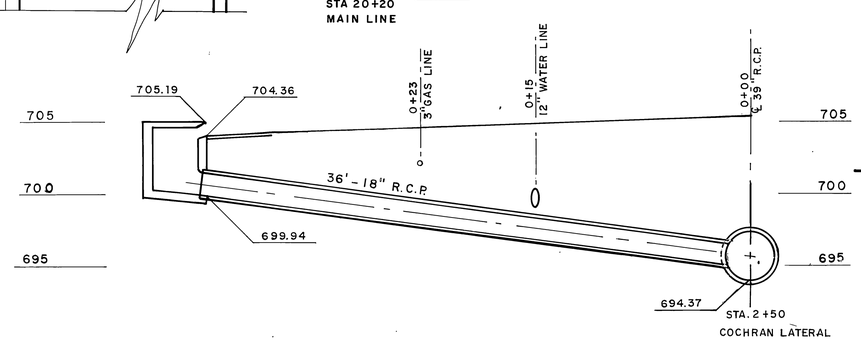

STA. 2+50
COCHRAN LATERAL

R.C.P. SIDE DRAIN INLET DETAILS

5' 0 5'
TYPICAL SCALE

REFERENCE	DESCRIPTION	APPROVED	DATE
C4	Built As Shown		

— REVISIONS —

AS BUILT

PROJECT NO. 1 - 0 - 062

RIVERSIDE COUNTY FLOOD CONTROL AND WATER CONSERVATION DISTRICT

LA SIERRA CHANNEL
MAGNOLIA DRAIN
STAGE I
JUNCTION WITH LA SIERRA CHANNEL

Approved: Robert D. Pagnant
Chief Engineer R.E. No. 8822
Date: 9-4-70

Designed: R. A.
Drawn:
Checked:
Date Drawn:

Sheet No 9 of 32
Dwg. No 1-247

D-210

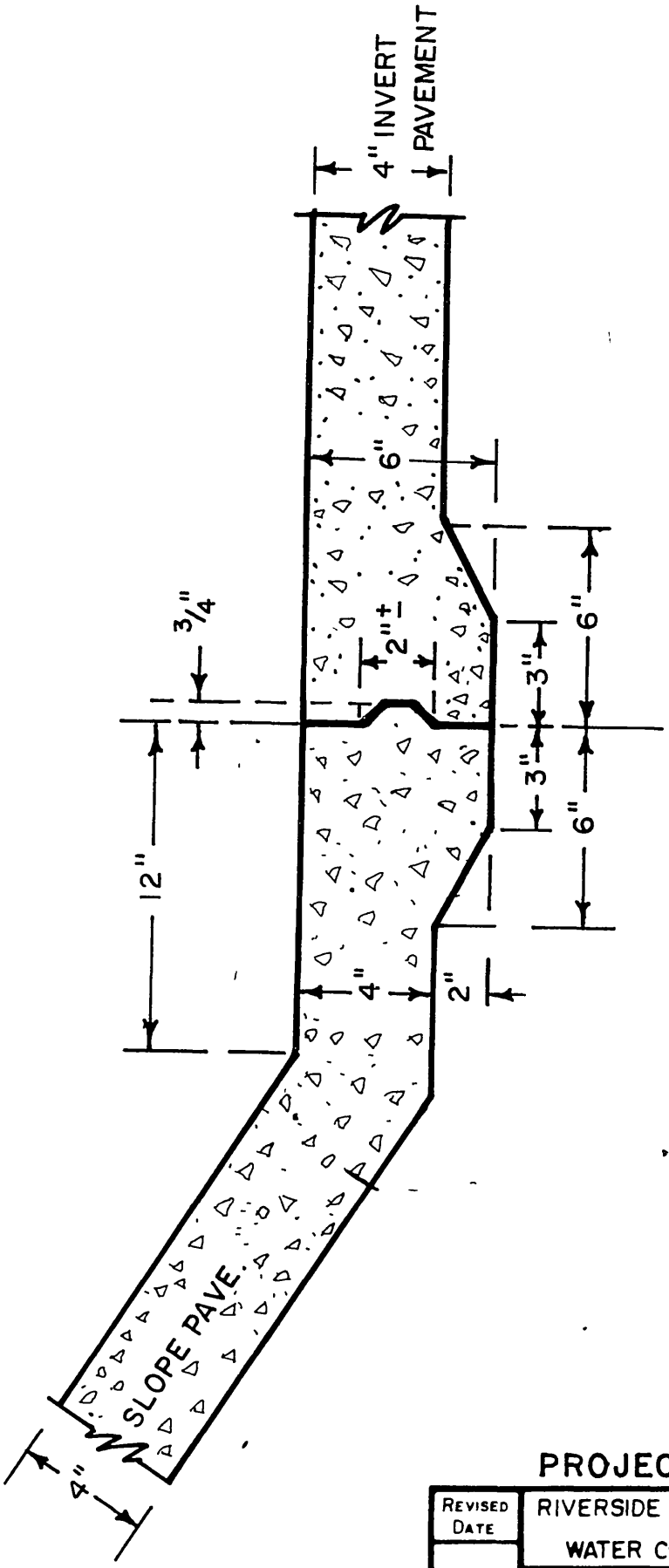

LONGITUDINAL CONSTRUCTION JOINT

NO SCALE

PROJECT NO. 1-0-062

REVISED DATE	RIVERSIDE COUNTY FLOOD CONTROL AND WATER CONSERVATION DISTRICT	
	LONGITUDINAL CONSTRUCTION JOINT	
	APPROVED CHIEF ENG R E NO 8822 DATE	DR KRB DATE 6/30/66
		TRAC / SH NO 10
		CHECKED / DWG 1-247

DATA	DETAIL SCHEDULE									
	A	B	C	D	E	F	G	H	I	J
DESIGN COVER	8'			8'						
WIDTH	10'			5'						
HEIGHT	5'			5'						
TOP SLAB T_1	9"			9"						
SIDE WALLS T_2	9"			9"						
BOTTOM SLAB T_3	10"			10"						
A BARS	#6@11			#6@11						
H	9'-1"			4'-6"						
B BARS	#5@7			#5@7						
H	2'-5½"			2'-5½"						
V	5'-2½"			5'-2½"						
C BARS	#5@18			#5@18						
D BARS	#6@11			#6@11						
H	9'-3½"			4'-6"						
E BARS	#5@7			#5@7						
H	2'-3"			2'-3"						
V	2'-8"			2'-8"						
CONCRETE CY/L.F.	0.951			0.66						
STEEL LBS/L.F.	143			79						
REMARKS										

LOCATION SCHEDULE		
STATIONS		BOX
FROM	TO	
0 + 27	18 + 36	A
TRANSITION		
18 + 36		A
18 + 56		D

NOTES

1. CONCRETE shall be Class "A"
2. ALL LONGITUDINAL BARS shall #4@18 Place bars in top and bottom slabs symmetrically about centerline. Place bars in walls symmetrically about mid-height of walls.
3. ALL QUANTITIES shown are approximate.
4. CLEAR COVER FOR STEEL shall be 1½" for top slab and side walls and 2" for each face of bottom slab
5. STEEL is dimensioned to back of bar bend
6. FOR CONSTRUCTION ON CURVES, straight transverse bars in top and bottom slabs shall be aligned radially with spacing measured at centerline. For straight bars and L-bars in walls, spacing shall be measured between the vertical legs of bars.
7. ALL TRANSVERSE CONSTR. JOINTS shall be in a vertical plane normal to the centerline and the spacing thereof shall not exceed 50 feet or be less than 10 feet Continuous keyways will be required at all construction joints with #4 X 3 foot long dowels at 12" spacing placed at the center of sections with one end wrapped to prevent bond. A complete curtain of transverse steel shall be placed three inches from each face of the joint and longitudinal steel will not be continuous through the joint
8. THE WALLS AND TOP SLAB may be poured monolithic, but after walls have been poured, a delay of not less than 2 hours shall be made before pouring of the top slab is started

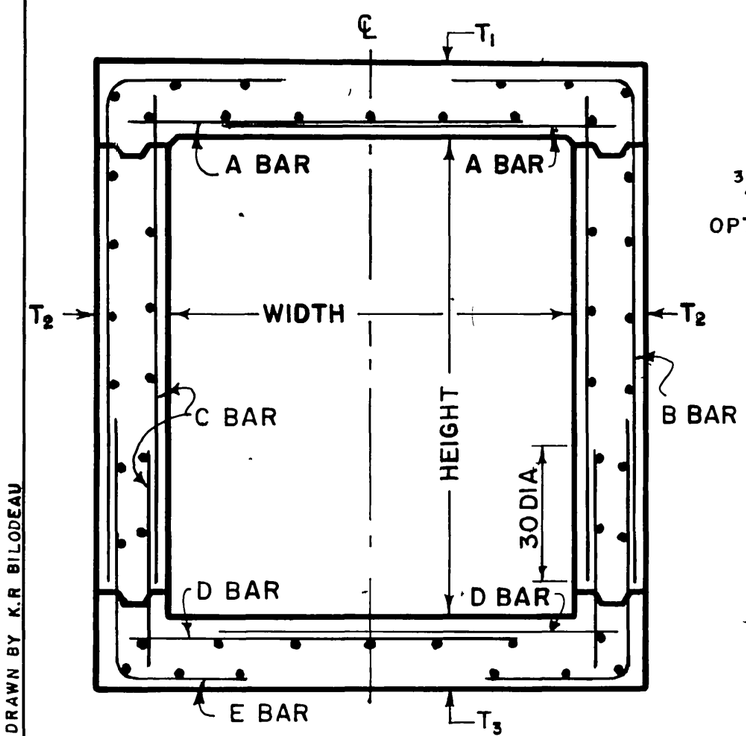

TYPICAL SECTION

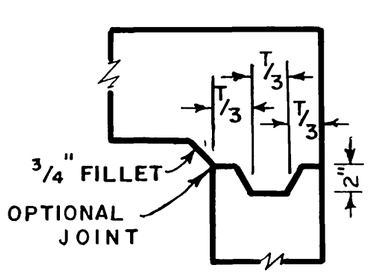

TOP JOINT

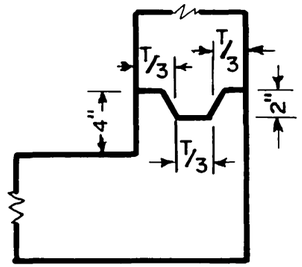

BOTTOM JOINT

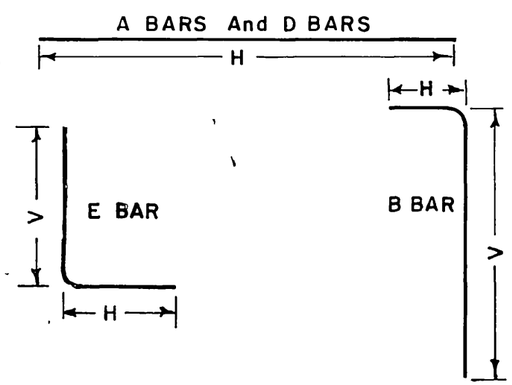

BAR DIAGRAM

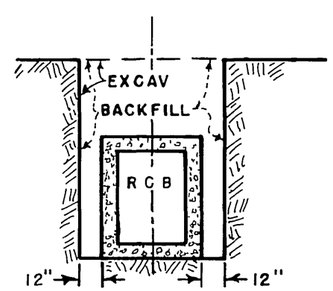

PAY LINES

DRAWN BY K.R. BILODEAU

PROJECT NO. 1-0-062

RIVERSIDE COUNTY FLOOD CONTROL AND WATER CONSERVATION DISTRICT

SINGLE CELL R.C.B. STRUCTURAL DETAILS

DESIGNED John K. Bryant 9-4-70	DRAWN	SHEET NO. 11
	CHECKED	D. 1-247

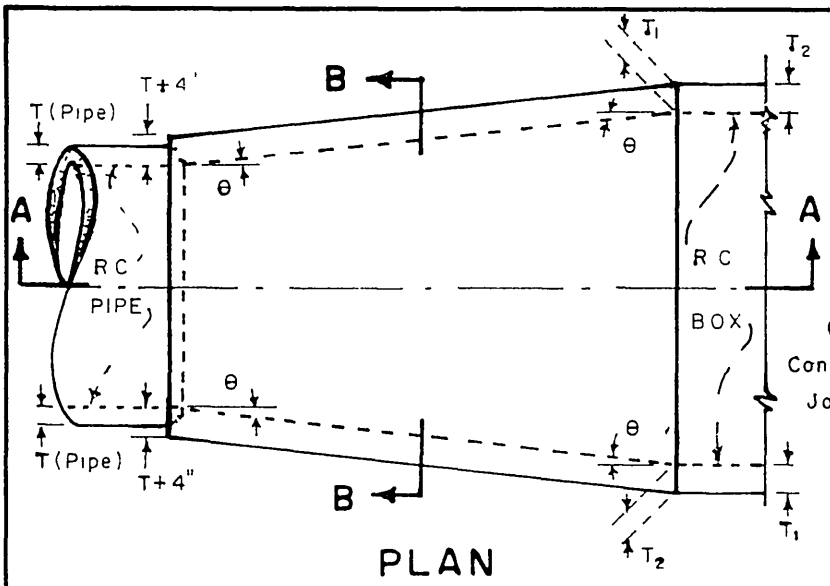

PLAN

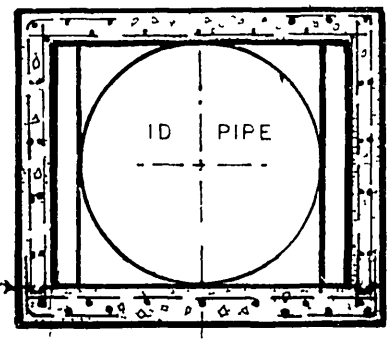

SECTION B-B

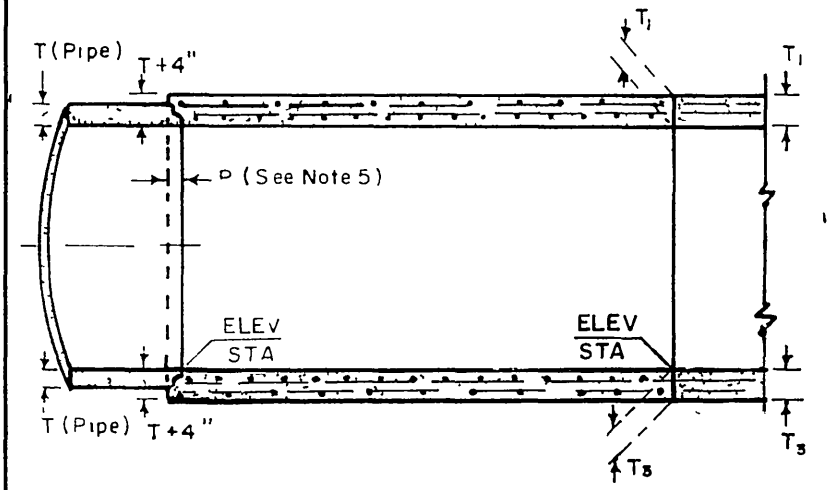

SECTION A-A

NOTES

1. The horizontal angle of divergence or convergence, θ, shall not exceed 5° 45'
2. Reinforce steel bars sizes, spacing, pattern and cover over the steel shall be that of the box section The bar lengths shall vary uniformly throughout the transition
3. The concrete thickness shall be that of the box section unless the wall thickness of the pipe plus 4 inches is greater, in which case the concrete thickness shall vary uniformly from that of the box section to that of the pipe wall plus 4" inches
4. The interior surface shall be smooth and vary uniformly between the two adjoining sections
5. At pipe juncture, embedment P shall be 5 inches for pipe sizes of 96 inches or less and 8 inches for pipe sizes over 96" inches
6. Keyed construction joints of the same dimensions as those of the box may be carried through the transition structure at contractor's option See Sec B-B above
7. The transition structure shall be constructed in accordance with the general structural notes applying to box as shown on the project drawings
8. Concrete shall be Class A

PROJECT NO 1-0-062

RIVERSIDE COUNTY FLOOD CONTROL AND WATER CONSERVATION DISTRICT

TRANSITION STRUCTURE NO. 1

Approved ____ Chief Engineer R E No 8822	Designed L.A.F.C.D	Sheet No 12 of 32
	Drawn K R B	
	Checked J K	Dwg No 1-247
Date	Date Drawn 10/68	

L A F C D NO 2-D235

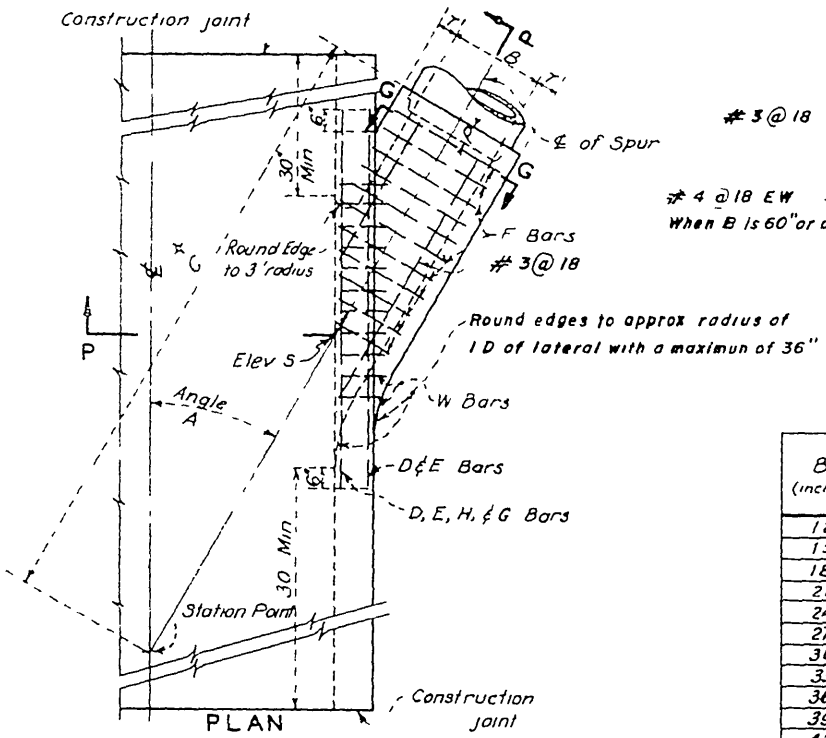

PLAN

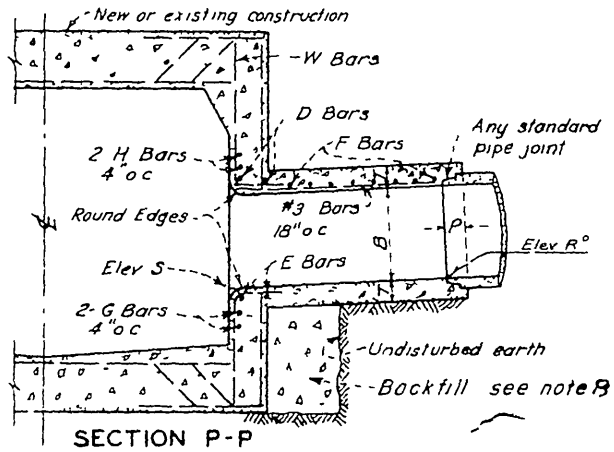

SECTION P-P

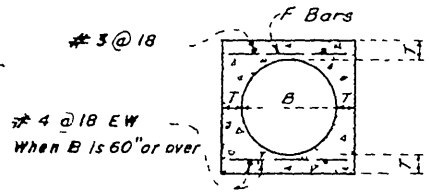

SECTION G-G

TABLE
for dimensions and bar sizes

B (inches)	T (inches)	D, E, H, & G Bars	F Bars
12	4	#5	#4 @ 6
15	4¼		
18	4½		
21	5		
24	5¼		
27	5½		
30	6		
33	6¼		
36	6½		
39	7		
42	7½	#6	#5 @ 6
45	7¾		
48	8		
51	8½		
54	9		
57	9¼		
60	9½		
63	10		
66	10¼		
69	10¾		
72	11		
78	11¾		
84	12½		
90	13¼	#7	#6 @ 6
96	14		
102	15½		
108	16		
114	16½		
120	17		
126	17		
132	17½		
138	17¾		
144	18		

NOTES

1 Values for A, B, C, Elev R, and Elev S are shown on the Project Dwgs Table of Values for T shown on this plan

2 Stations specified on drawings apply at the intersection of center lines of main line and laterals, except that stations for catch basin connector pipe apply at inside wall of structure

3. Reinforcing steel shall be straight bars 1½" clear from face of concrete unless otherwise shown

W bars are of size and spacing specified for wall steel on plan and shall be cut in center of opening and bent into top and bottom of junction structure

Omit H bars when soffit of spur is 12" or less below soffit of main line, and omit G bars when invert of spur is 12" or less above floor of main line

4 Junction structure shall be poured monolithically with main line storm drain, manhole or transition

5 Floor of structure shall be steel - troweled to the spring line.

6 f'c = 3000 psi at 28 days.

7 Embedment, P, shall be 5" for B = 96" or less and 8" for B over 96"

8 Backfill under structure with 1-3-5 mix concrete, or compact soil to relative density required by specifications
Backfill may be omitted if structure is laid on undisturbed earth to storm drain wall

D-210

PROJECT NO 1 - 0 - 062

RIVERSIDE COUNTY FLOOD CONTROL AND WATER CONSERVATION DISTRICT

JUNCTION STRUCTURE NO. 5

Approved — Chief Engineer R.E. No 8822	Designed	Sheet No 13 of 32
	Drawn Ken Bilodeau	Dwg No 1-247
Date	Checked	
	Date Drawn AUG 1968	

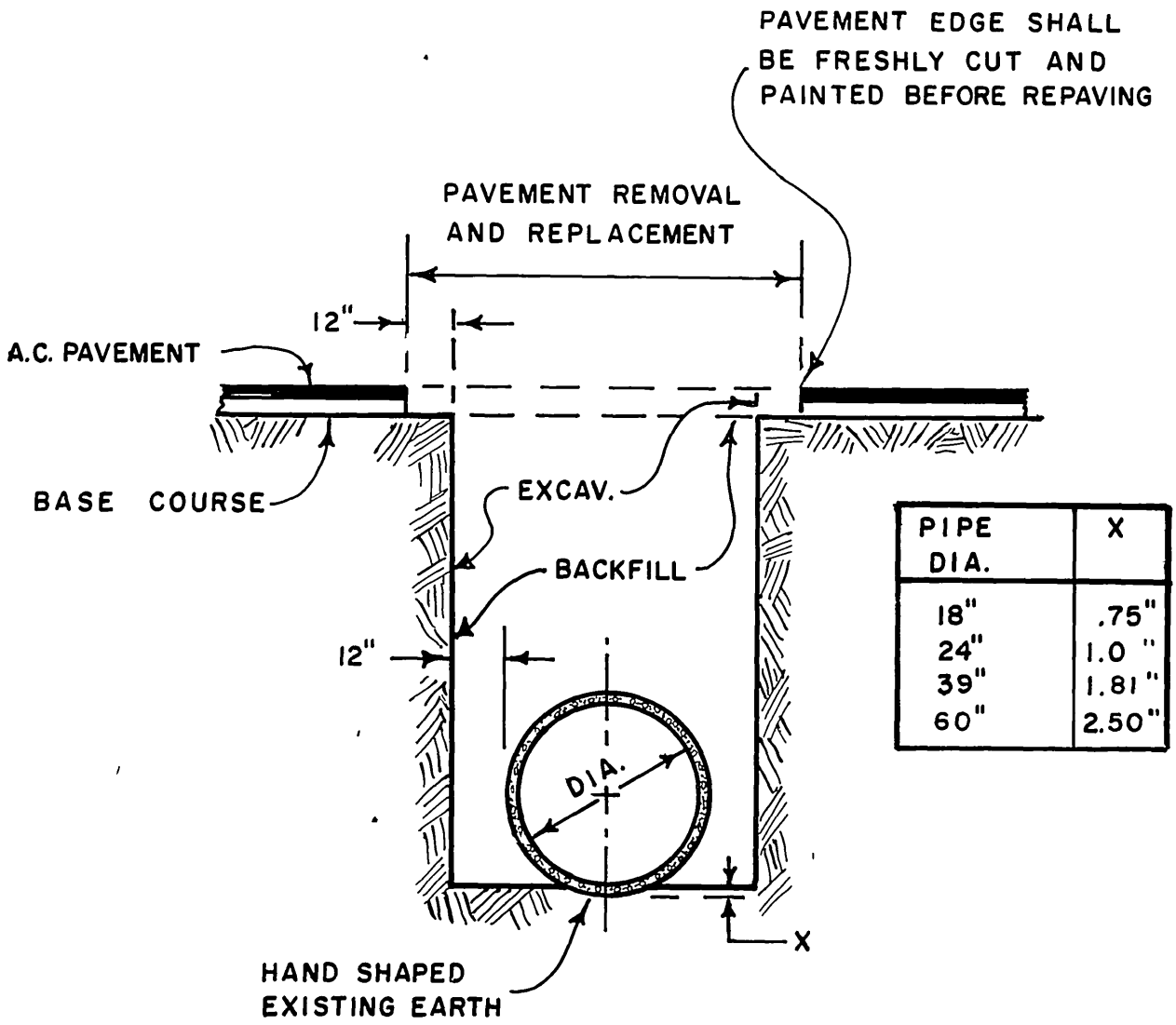

PIPE DIA.	X
18"	.75"
24"	1.0 "
39"	1.81 "
60"	2.50"

PIPE BEDDING FOR CLAY AND CONCRETE PIPE UNLESS OTHERWISE SPECIFIED.

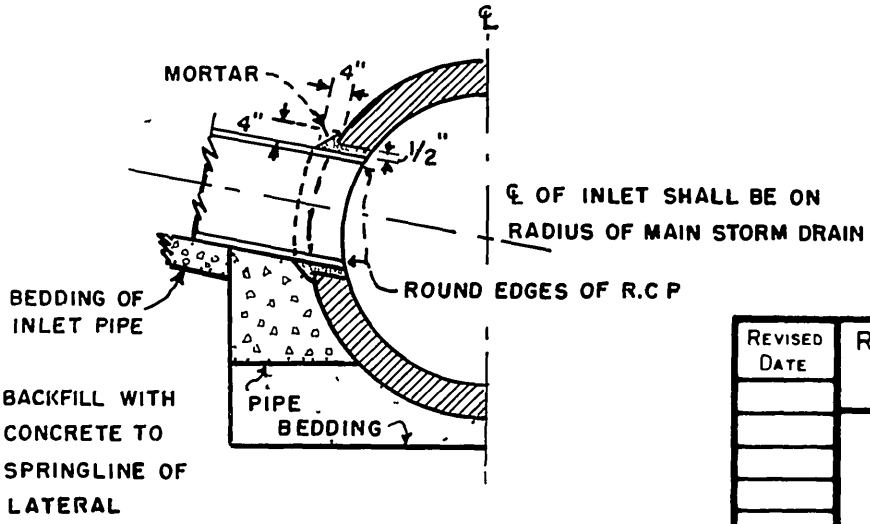

TYPICAL LATERAL CONNECTION

PROJECT NO. 1-0-062

REVISED DATE	RIVERSIDE COUNTY FLOOD CONTROL AND WATER CONSERVATION DISTRICT
	PIPE BEDDING DETAILS
APPROVED CHIEF ENG R E NO 8822 DATE	DR J.H. DATE / / TRAC KRB SH NO 14 CHECKED DWG 1-247

SEE STANDARD
MANHOLE FRAME AND COVER FOR CATCH BASINS

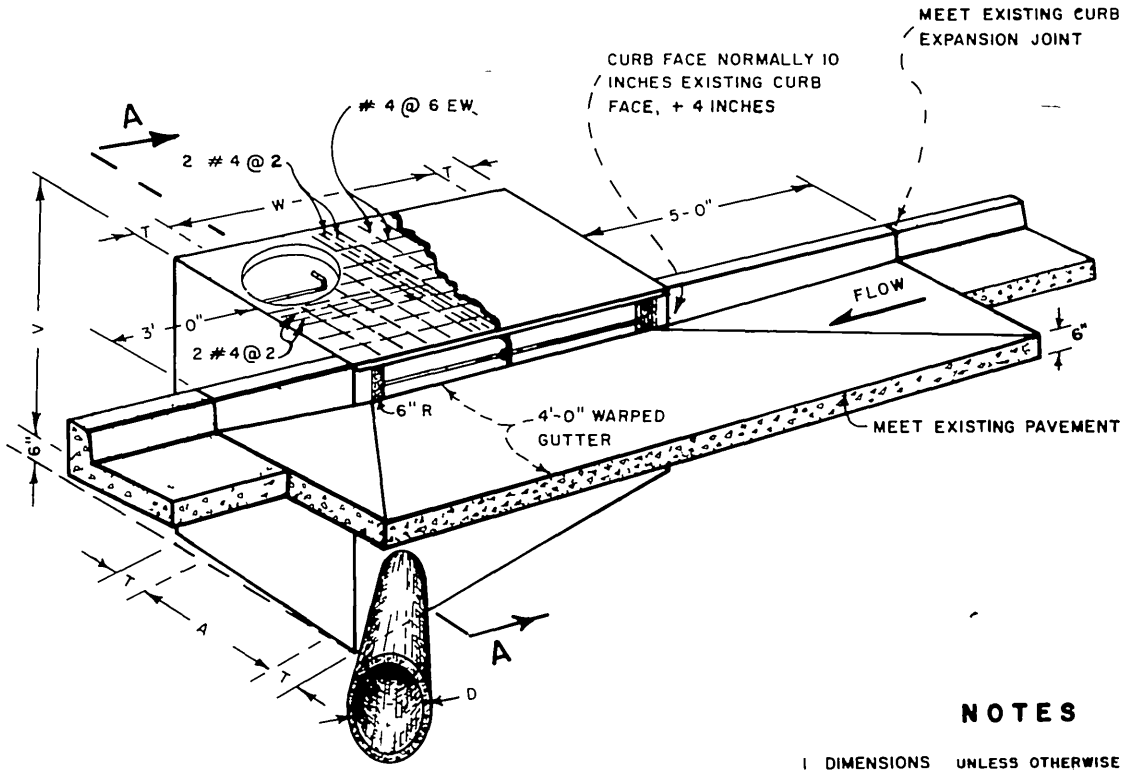

PERSPECTIVE OF CATCH BASIN NO. 1

NOTES

1 DIMENSIONS UNLESS OTHERWISE SPECIFIED
- V = 5 25 FEET
- V' = 3 0 FEET
- W = 7 FEET
- T = 8 INCHES IF V IS LESS THAN 8 FEET
- T = 10 INCHES IF V IS 8 FEET OR MORE
- D = 18 INCHES
- A = D PLUS 12 INCHES (38 INCHES MIN)

2 CONCRETE SHALL BE CLASS "A" PCC (6 0 SACK)

3 THE SURFACE OF ALL EXPOSED CONC SHALL CONFORM TO SLOPE, GRADE, COLOR, FINISH AND SCORING IN THE EXISTING OR PROPOSED CURB AND WALK ADJACENT TO THE BASIN THE BASIN FLOOR SHALL BE GIVEN A TIGHT WOOD FLOAT FINISH CURVATURE OF THE LIP AND SIDEWALLS AT THE GUTTER OPENING SHALL NOT BE MADE BY PLASTERING THE OUTLET PIPE SHALL BE TRIMMED TO FINAL SHAPE AND LENGTH BEFORE THE CONCRETE IS POURED

4 STEPS 3/4 INCH PLAIN ROUND GALVANIZED STEEL STEPS SHALL BE INSTALLED 12 INCHES APART WHEN V EXCEEDS 4 FEET 6 INCHES THE TOP STEP SHALL BE 6 INCHES BELOW THE SURFACE AND SHALL BE 2 1/2 INCHES CLEAR FROM THE WALL ONLY ONE STEP 12 INCHES FROM THE BOTTOM SHALL BE INSTALLED IF V IS 4 FEET 6 INCHES OR LESS THE STEPS SHALL BE ANCHORED NOT LESS THAN 4 INCHES IN THE WALL OF THE BASIN

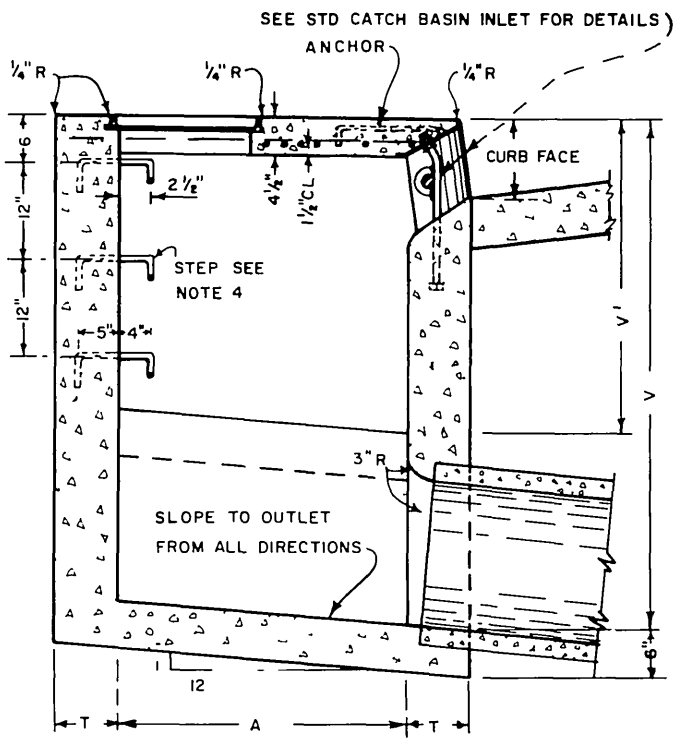

SECTION A-A

LA CFCD 2-D162 2-D163

RIVERSIDE COUNTY FLOOD CONTROL AND WATER CONSERVATION DISTRICT

CATCH BASIN NO. 1

Approved ____ Chief Engineer R.E. No. 8822	Designed LA.F.C.D	Sheet No 15 of 32
	Drawn K R B	
	Checked J H	Dwg. No 1-247
Date	Date Drawn 8/2/68	

PROJECT NO. 1-0-062

MISSING SHEET

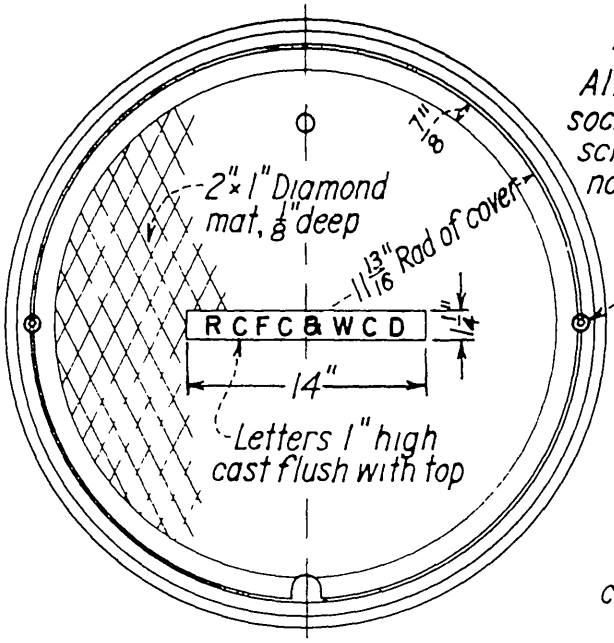

TOP OF MANHOLE FRAME & COVER

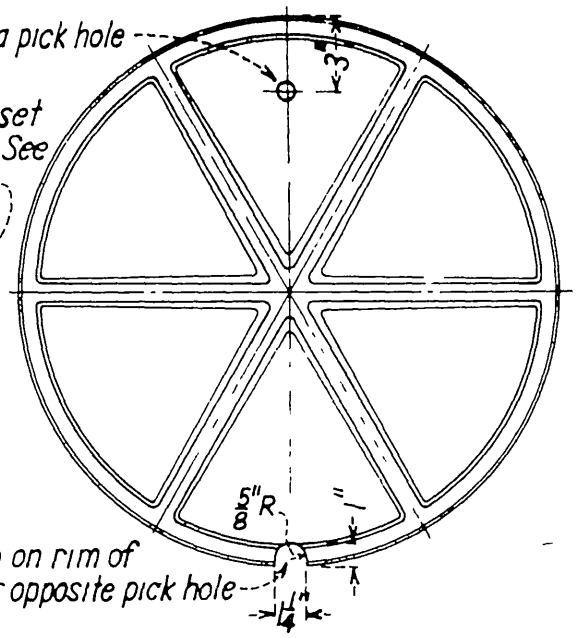

BOTTOM OF MANHOLE COVER

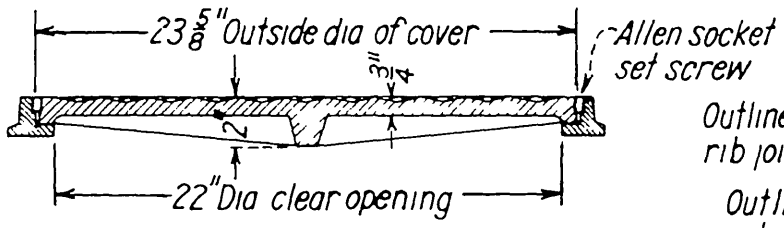

CROSS SECTION THRU FRAME & COVER

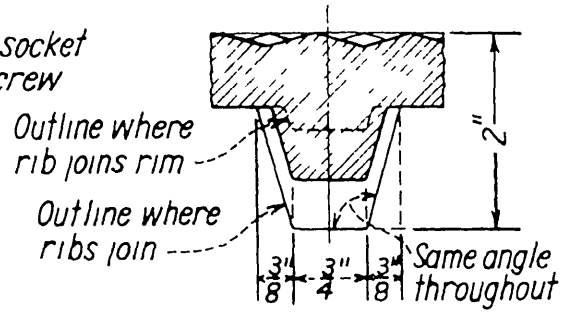

CROSS SECTION THRU RIB AT MID RADIUS

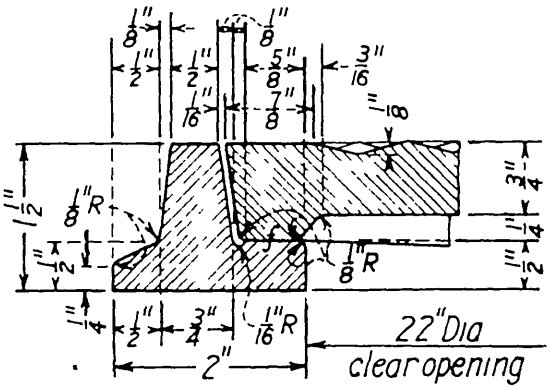

CROSS SECTION THRU RIM

NOTES

1. Frame and cover shall be gray cast iron conforming to the latest A S T M standard A 48, class 30 or better
2. Install two 3/4" × 3/4" Allen socket set screws, 90° to pick hole, in holes drilled and tapped 1" in depth
3. All parts of the frame and cover except machined surfaces shall be coated with asphaltum paint
4. Frame and cover shall be tested for accuracy of fit and shall be marked in sets before delivery

D-210

PROJECT NO 1-0-062

Revised Date	RIVERSIDE COUNTY FLOOD CONTROL AND WATER CONSERVATION DISTRICT	
	MANHOLE FRAME & COVER FOR CATCH BASINS	
	DR / DATE / /	
	APPROVED CHIEF ENG R E NO 8822 DATE	TRAC / SH NO 17
		CHECKED / DWG 1-247

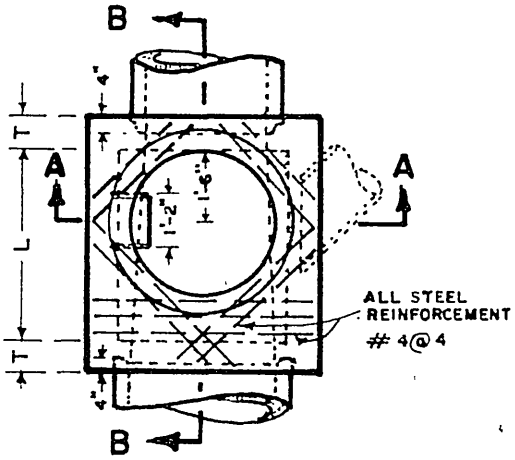

PLAN
(SHAFT NOT SHOWN)

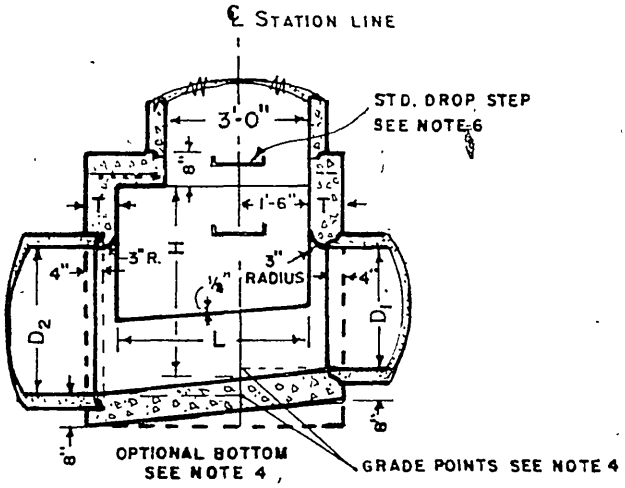

SECTION B-B

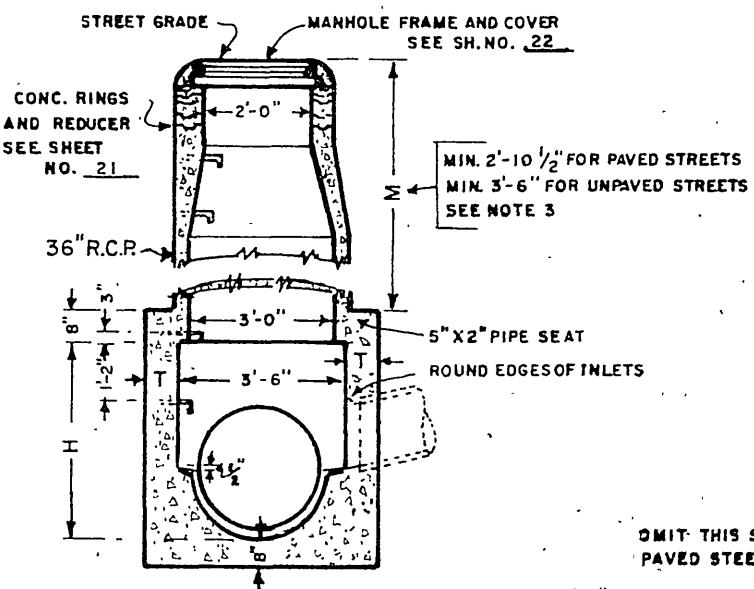

SECTION A-A

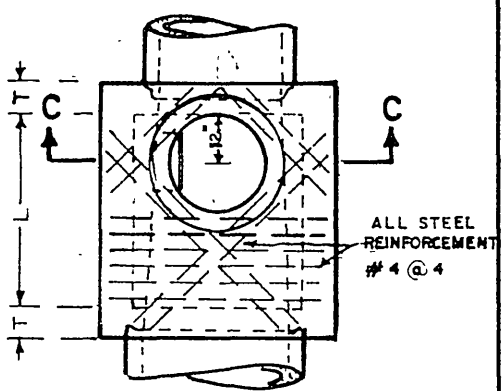

DETAIL N
PLAN
(SHAFT NOT SHOWN, SEE NOTE 3

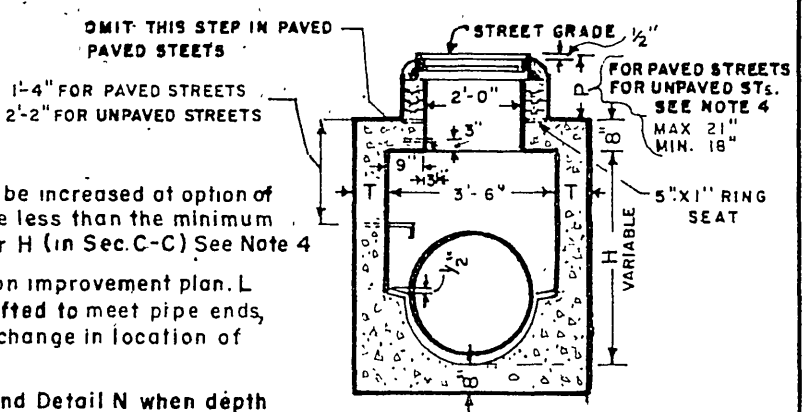

SECTION C-C

1. HEIGHT H shall be not less than 4'-0" but may be increased at option of Contractor provided that the value of M shall be less than the minimum specified and that the reducer shall be used. For H (in Sec.C-C) See Note 4
2. LENGTH L shall be 4' unless otherwise shown on improvement plan. L may be increased or location of manhole shifted to meet pipe ends, at the option of Contractor, except that any change in location of manhole must be approved by the Engineer.
3. SHAFT shall be constructed as per Sec.C-C and Detail N when depth M from street grade to top of box is less than 2'-10 1/2" for paved. streets or 3'-6" for unpaved streets.
4. DEPTH P may be reduced to an absolute limit of 6" inches when larger values of P would reduce H (in Sec.C-C) to be 3'-6" or less
5. T shall be 8" for values of H up to and including 8 ft.
   T shall be 10" for values of H over 8 ft.
6. STEPS shall be **Alhambra Fdy. A - 3320 or equal**
7. REINFORCING STEEL shall be No. 4 and 1 1/2" clear from face of conc.
8. STATIONS refer to Plan & Profile. sheets. Elevations at ℄ and prolonged invert grade line. See Note 2 for shifting location.
9. RINGS, reducer, and pipe for access shaft shall be seated in cement motar and neatly pointed or wiped inside shaft.
10. FLOOR of manhole shall be steel – troweled.
11. CONCRETE shall be Class "A".

L.A.C.F.C.D. NO. 2-D102 CITY OF RIV. NO. 431

PROJECT NO. 1-0-062

RIVERSIDE COUNTY FLOOD CONTROL AND WATER CONSERVATION DISTRICT

MANHOLE NO. 1

Approved — — — — — — — Chief Engineer R.E. No 8822	Designed. L.A.C.F.C.D	Sheet No. 18 of 32
	Drawn K.R.M.	
	Checked J.H.	Dwg. No. 1-247
Date	Date Drawn 11/22/68	

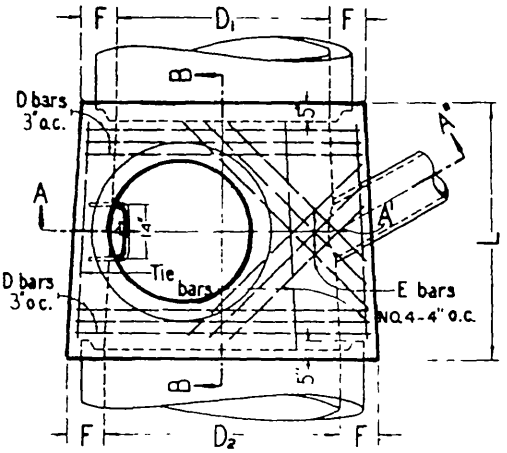

PLAN
(Shaft not shown)

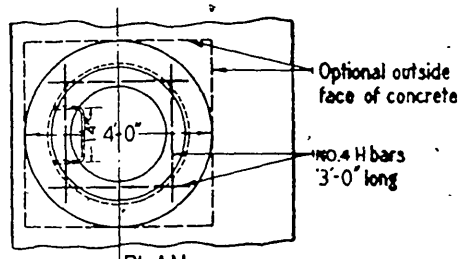

PLAN
(Rings and cover not shown)

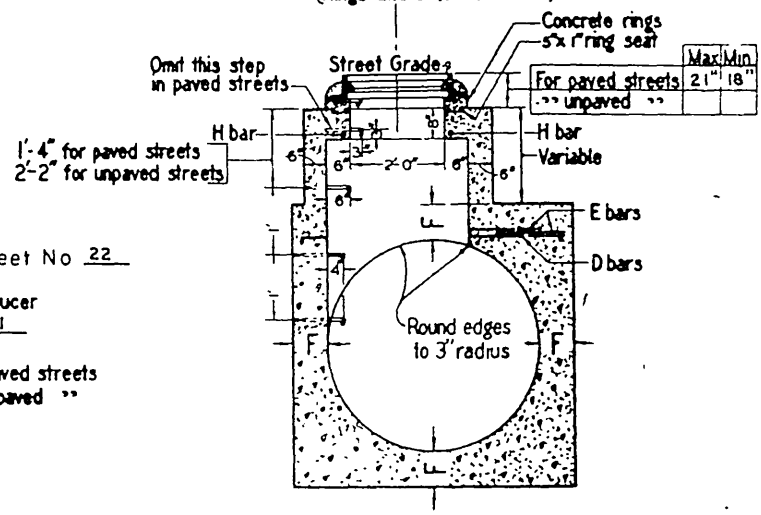

	Max	Min
For paved streets	21"	18"
" unpaved "		

DETAIL M
(See Note 4)

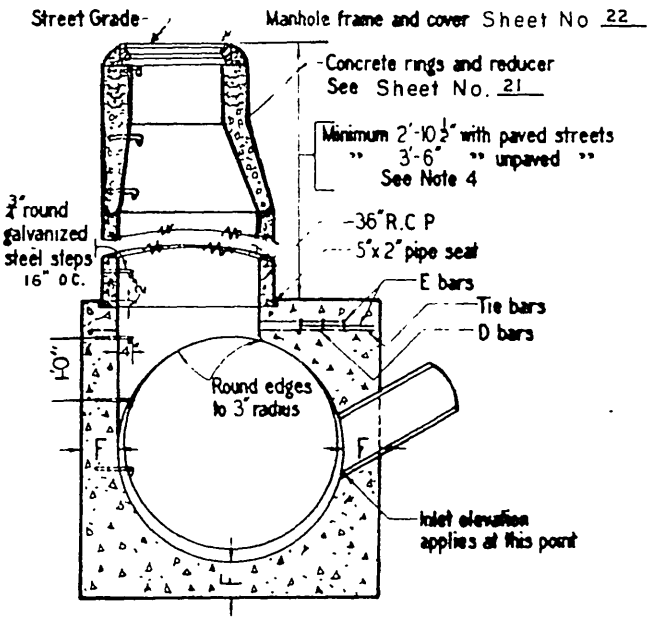

SECTION A-A'-A"

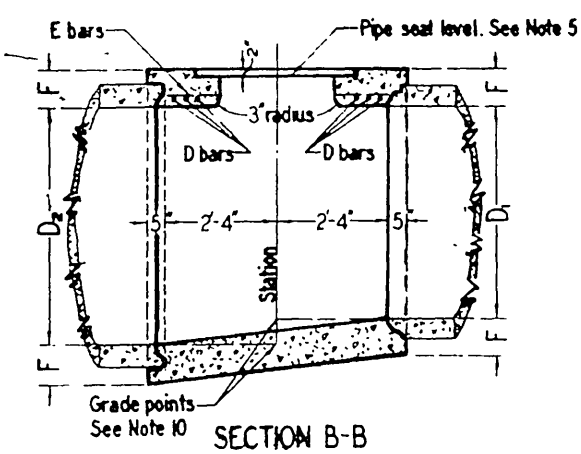

SECTION B-B

TABLE OF VALUES FOR F	
D2	F
36"	6½"
39"	7"
42"	7½"
45"	7½"
48"	8"
51"	8½"
54"	9"
57"	9½"
60"	9½"
63"	10"
66"	10½"
69"	10½"
72"	11"
78"	11½"
84"	12½"
90"	13½"
96"	14"

PROJECT NO. 1-0-062

REVISED DATE	RIVERSIDE COUNTY FLOOD CONTROL AND WATER CONSERVATION DISTRICT		
	MANHOLE NO. 2		
	APPROVED CHIEF ENG R.E. NO 8822	DR	DATE / /
		TRAC	SH NO 19
	DATE	CHECKED	DWG 1-247

NOTES FOR MANHOLE NO. 2

1. – CENTER OF MANHOLE SHAFT shall be located over center line of storm drain when diameter D_1 is 48" or less, in which case place E bars symmetrically around shaft at 45° with center line.
2. – LENGTH L shall be 5'-6" unless shown otherwise on improvement plan. At option of Contractor L may be increased or location of manhole shifted to meet pipe ends.
3. – DETAIL M. When depth of manhole from street grade to top of box is less than 2'-10½" for paved streets or 3'-6" for unpaved streets, construct monolithic shaft as per Detail M. The Contractor shall have the option of constructing shaft as per Detail M for any depth of manhole. When diameter D_1 is 48" or less, center of shaft shall be located as per Note 2.
4. – THICKNESS OF DECK shall vary when necessary to provide level pipe seat, but shall not be less than tabular values for F shown on this plan.
5. – REINFORCING STEEL shall be round, deformed bars, 1½" clear from face of concrete unless shown otherwise. Sizes and lengths are shown in table below.
6. – CONCRETE shall be class A.
7. – STEPS shall be ¾" round, galvanized steel and anchored not less than 6 inches in the walls of structure. Unless otherwise shown the spacing shall be 16" on centers. The lowest step shall be not more than 2'-6" above the invert. (Alhambra Fdy. A–3320 or equal)
8. – RINGS, REDUCER, AND PIPE for access shaft shall be seated in cement mortar and neatly pointed or wiped inside the shaft
9. – STATIONS of manholes shown on improvement plan apply at center of shaft. Elevations shown at stations, refer to prolonged invert grade lines.
10. – FLOOR of manhole shall be steel-troweled to springing line.
11. – BODY of manhole shall be poured in one continuous operation, except that the Contractor shall have the option of placing at the springing line a construction joint with a longitudinal keyway.

STEEL TABLE FOR MANHOLE

	D bars			E bars		
Diam D_2	No Req'd	Size	Length	No Req'd	Size	Length
36"	6	No. 4	3'-10"	4	No. 4	2'-9"
39"	6	"	4'-2"	4	"	2'-11"
42"	6	No 5	4'-6"	4	"	3'-2"
45"	6	"	4'-10"	4	"	3'-5"
48"	6	"	5'-1"	4	"	3'-7"
51"	6	"	5'-5"	6	"	4'-9"
54"	6	"	5'-9"	6	"	5'-1"
57"	6	"	6'-1"	6	"	5'-6"
60"	6	"	6'-4"	6	"	5'-11"
63"	6	"	6'-8"	6	"	6'-3"
66"	6	"	7'-0"	8	"	6'-8"
69"	6	"	7'-4"	8	"	6'-8"
72"	6	"	7'-7"	8	"	6'-8"
78"	6	"	8'-3"	8	"	6'-8"
84"	6	"	8'-10"	10	"	6'-8"
90"	8	No 6	9'-6"	10	"	6'-8"
96"	8	"	10'-1"	10	"	6'-8"

D bars shall be spaced 3" o.c. E bars shall be spaced 4" o.c. Tie bars shall be No 3 spaced 18" o.c or closer.

When L greater than 5'-6" is specified on improvement plan, continue D bars at 6" o.c.

Lengths shown in table are for longest bars. Where shorter bars are required, bend or cut to meet field requirements.

PROJECT NO. 1-0-062

REVISED DATE	RIVERSIDE COUNTY FLOOD CONTROL AND WATER CONSERVATION DISTRICT		
	MANHOLE NO. 2		
	APPROVED CHIEF ENG R.E. NO 8822 DATE	DR	DATE / /
		TRAC	SH NO. 19 A
		CHECKED	DWG. 1-247

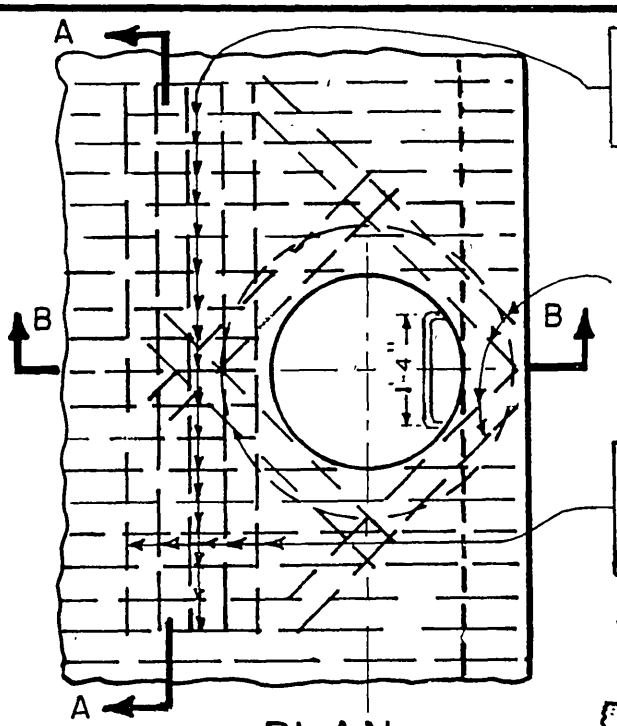

Size and spacing of steel as shown on improvement plan, except that 5 bars on each side of shaft shall be not smaller than # 5 @ 4" or equivalent

5 @ 4" X 5'

5 bars 7' long, 4" o.c. of size shown for transverse steel on improvement plan, except not less than # 5. Warp these bars under bars that have been cut for shaft opening.

PLAN

SHAFT NOT SHOWN

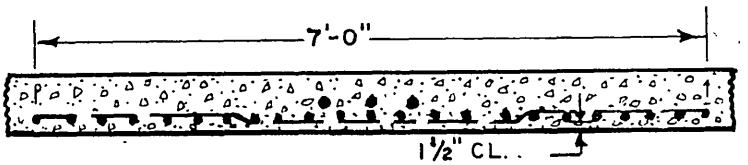

SECTION A-A

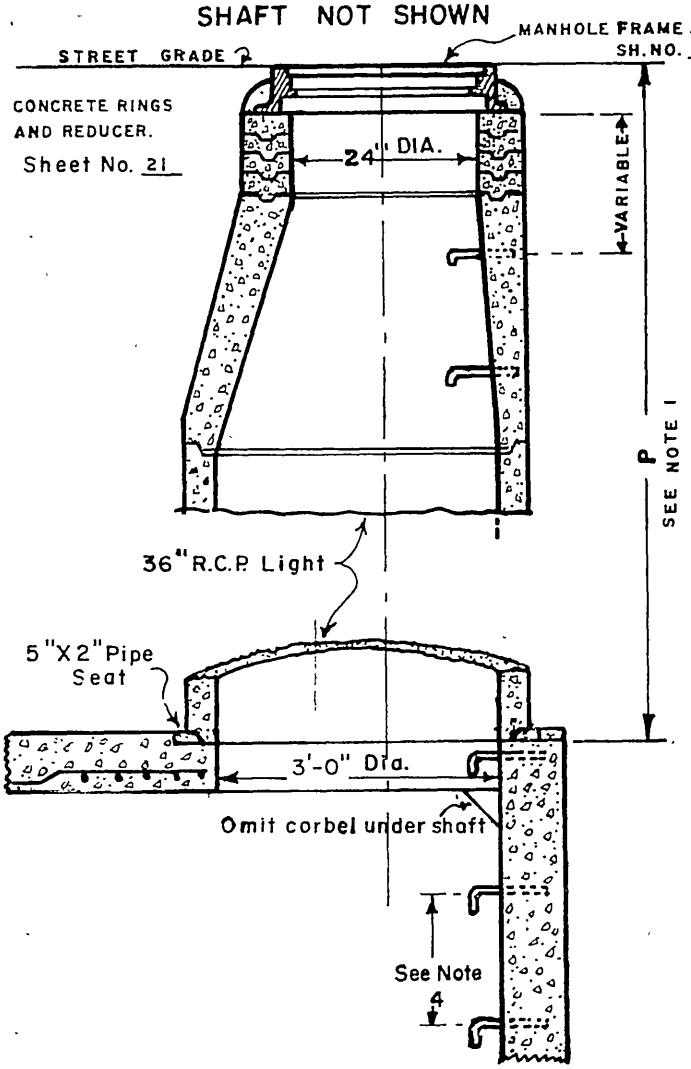

SECTION B-B

MANHOLE FOR BOX SECTION STORM DRAIN

NOTE

1.- DEPTH P: When depth P from street grade to top of pipe seat is less than 2'-10½" in paved streets or 3'-6" in unpaved streets, construct 2 ft. diameter shaft, using concrete rings as per Standard Plan for concrete rings; otherwise, construct 3 ft. shaft as shown on this plan.

2- STATIONS shown on improvement plan refer to center line of shaft.

3- STEPS shall be ¾" round galvanized steel anchored not less than 6" in walls of structure and unless otherwise shown shall be spaced 16" or 17" on centers. The lowest step shall be not more than 2 feet above the floor.

L.A.C.F.C. 2-D104

PROJECT NO. 1-0-062

Revised Date	RIVERSIDE COUNTY FLOOD CONTROL AND WATER CONSERVATION DISTRICT	
	MANHOLE NO 3	
	DR K.R.B. DATE / /	
	TRAC K.R.B.	SH NO 20
	CHECKED	DWG 1-247

APPROVED
CHIEF ENG R.E. NO 8822
DATE

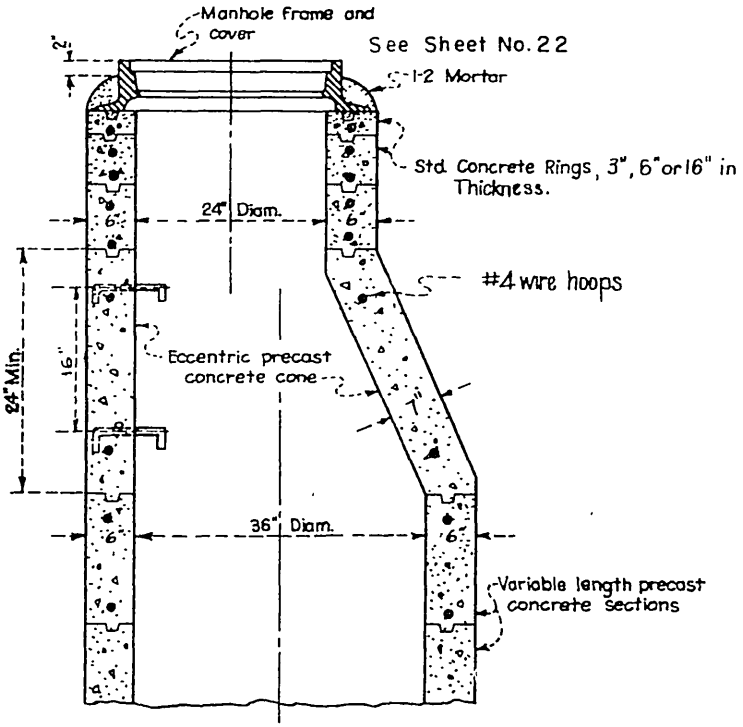

VERTICAL SECTION OF PLAIN CONCRETE ECCENTRIC MANHOLE SHAFT

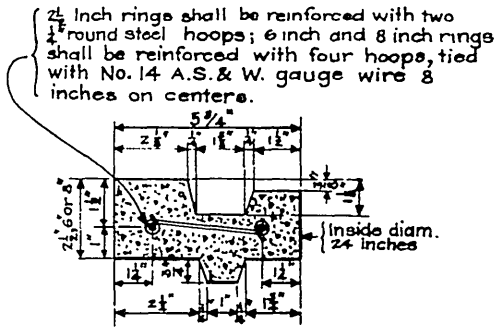

CROSS SECTION OF REINFORCED CONCRETE RING

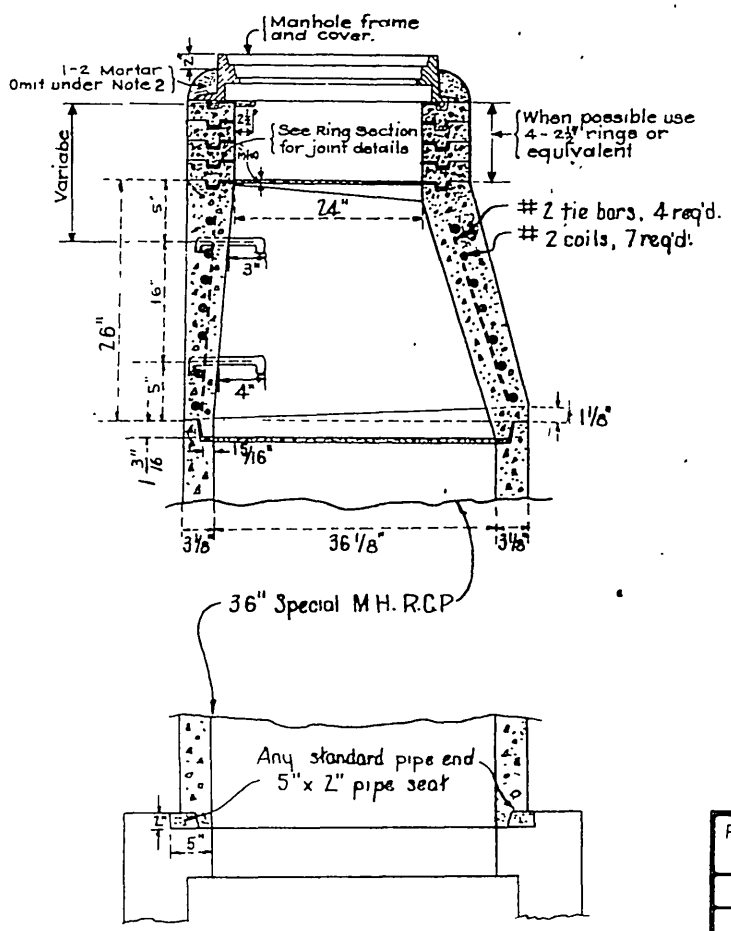

VERTICAL SECTION OF REINFORCED CONCRETE ECCENTRIC MANHOLE SHAFT

NOTES

1. ALL JOINTS shall be filled with 1-2 mortar and neatly pointed or wiped on inside of shaft.
2. COLLAR of 1-2 mortar around cover frame shall be omitted in rock and oil streets and in paved streets.
3. STEPS shall be ¾ inch round galvanized steel. Top step shall be placed directly beneath the manhole cover frame.

   Width of all steps shall be 14 inches between leg centers. Except where shown otherwise, spacing of steps in shaft shall be 16 or 17 inches on center.
4. ECCENTRIC MANHOLE shaft, reducer, and rings may be plain concrete. For unreinforced sections, the minimum thickness shall be 6 inches. The concrete used shall be of such strength so as to develop 3500 p.s.i. or greater in 28 days.

PROJECT NO. 1-0-062

REVISED DATE	RIVERSIDE COUNTY FLOOD CONTROL AND WATER CONSERVATION DISTRICT		
	MANHOLE SHAFT FOR CAST PIPE		
APPROVED CHIEF ENG. R.E. NO. 8822	DR	DATE	
DATE	TRAC	SH. NO. 21	
	CHECKED	DWG. 1-247	

L.A.C.F.C.D. 2-01-07

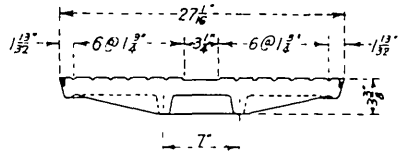

SECTION OF COVER

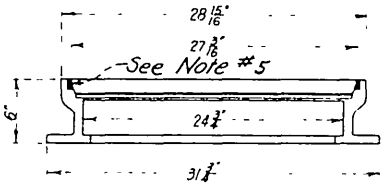

SECTION OF FRAME

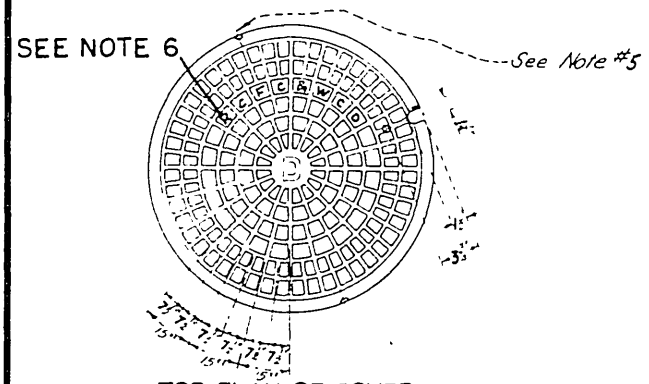

TOP PLAN OF COVER
WEIGHT-262 LBS.

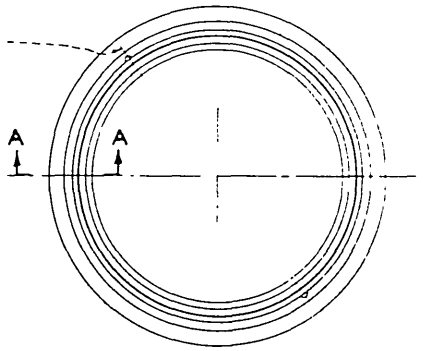

PLAN OF FRAME
WEIGHT - 196 LBS

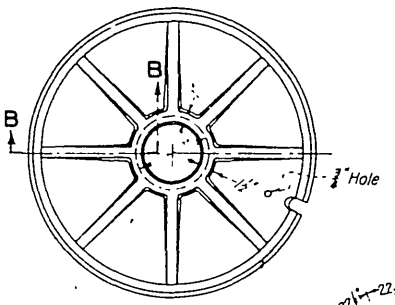

BOTTOM PLAN
OF COVER

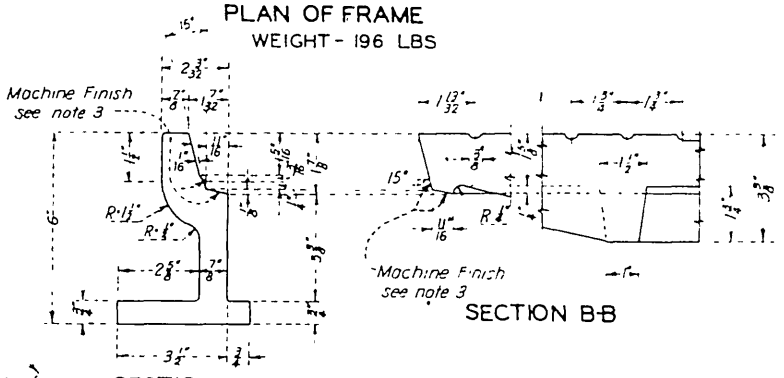

SECTION A-A

SECTION B-B

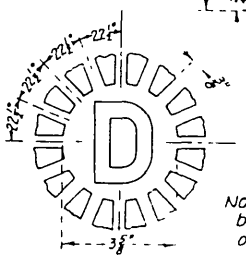

Note - Surface of Letter shall be Flush with Finished Surface of cover

DETAILS OF LETTER

NOTES

1. The Manhole Frame and Cover shall be made of gray cast iron conforming to the latest ASTM standard A48, class 30 or better.
2. All parts of the Manhole Frame and Cover except machined surfaces shall be coated with asphaltum paint
3. The Manhole Frame and Cover shall be tested for accuracy of fit and shall be marked in sets before delivery. The Cover shall fit the Frame snugly but not tightly
4. The weights of the Frame and Cover shall not vary more than two percent from those given hereon
5. Covers for manholes located in right of way, easements, alleys, parkways and all other places except paved streets shall be provided with allen socket set screw locking devices. The Contractor shall drill and tap two holes to a depth of 1" at 90° to pick hole and install 3/4" x 3/4" allen socket set screws therein
6. Cast Letters R C F C & W C D

PROJECT NO. 1-0-062

REVISED DATE	RIVERSIDE COUNTY FLOOD CONTROL AND WATER CONSERVATION DISTRICT		
	MANHOLE FRAME & COVER NON - ROCKING		
	APPROVED CHIEF ENG P E NO 8822	DR	DATE / /
		TRAC	SH NO 22
	DATE	CHECKED	DWG 1-247

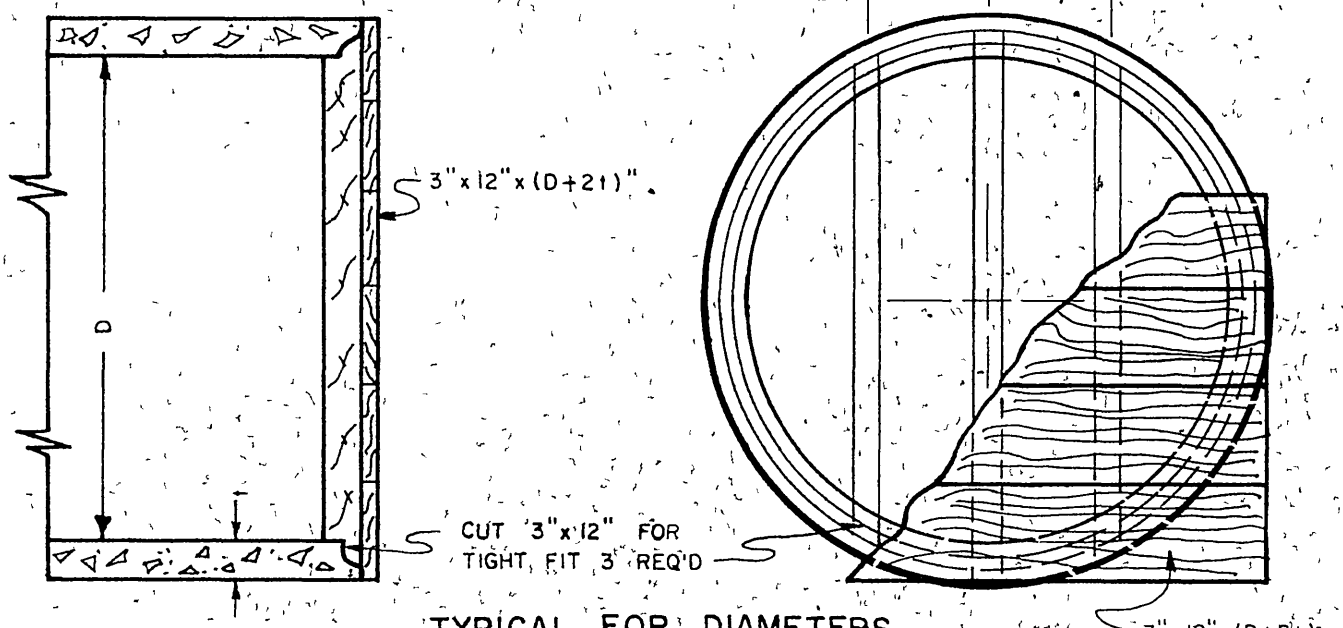

TYPICAL FOR DIAMETERS
GREATER THAN 48"

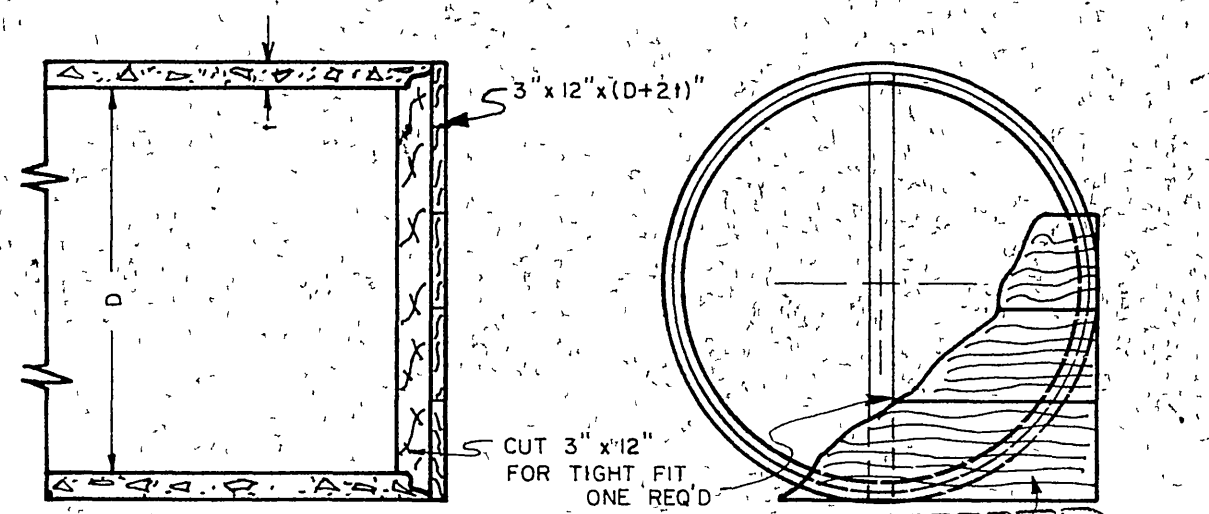

TYPICAL FOR DIAMETERS
LESS THAN 48"

NOTES

1. NAIL 3"x 12" TO VERTICAL SUPPORTS WITH 40d GALV NAILS 3" c/c
2. ALL LUMBER SHALL BE CREOSOTED DOUGLAS FIR, 1500 f CONSTRUCTION GRADE

DEPT. OF PUBLIC WORKS
PROJECT NO. 1-0-062

RIVERSIDE COUNTY FLOOD CONTROL AND WATER CONSERVATION DISTRICT

TIMBER BULKHEADS

D-210

Approved ____ Chief Engineer R.E. No 8822	Designed R.B.	Sheet No 23 of 32
	Drawn	
	Checked J.H	Dwg No 1-247
Date	Date Drawn	

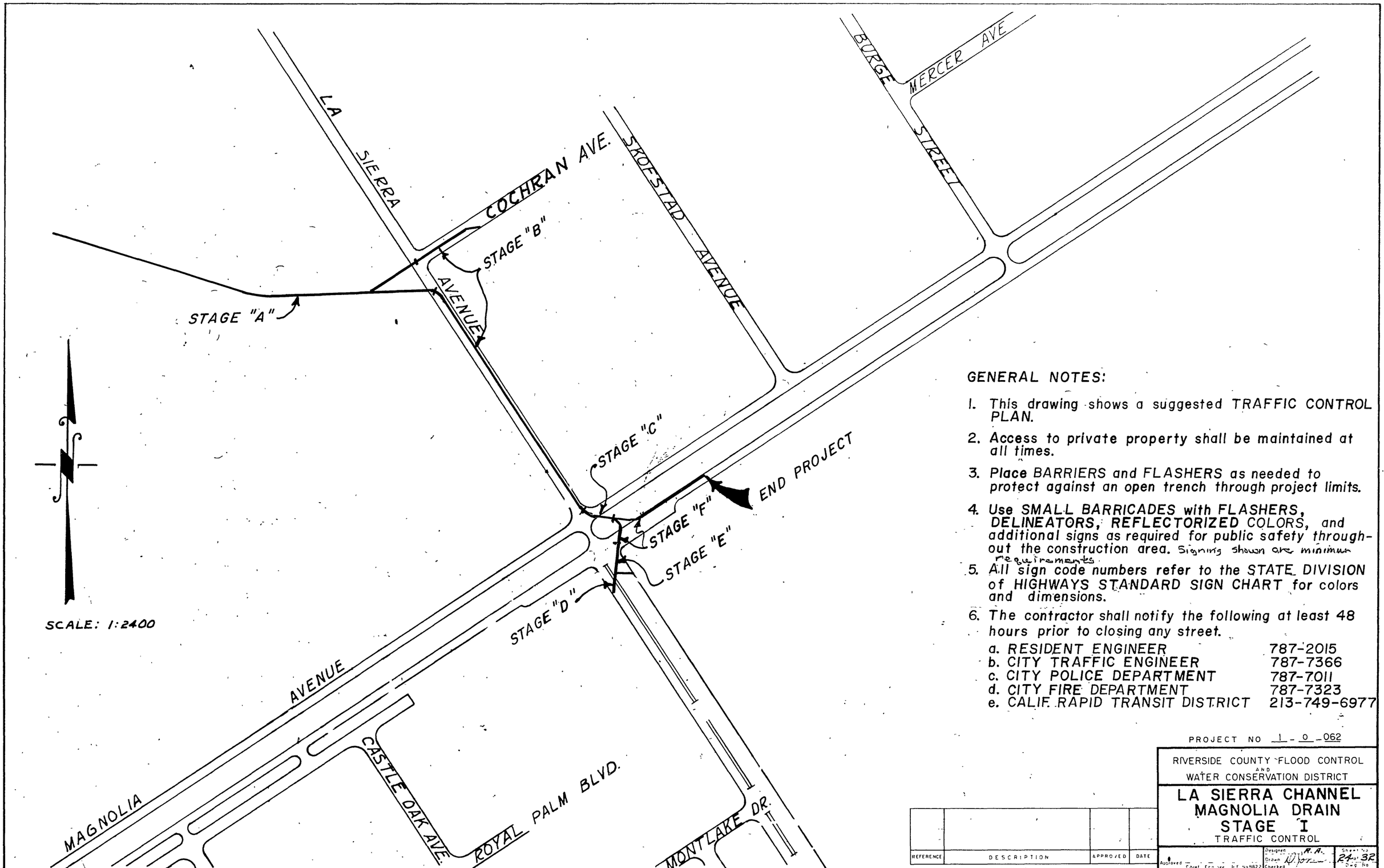

GENERAL NOTES:

1. This drawing shows a suggested TRAFFIC CONTROL PLAN.
2. Access to private property shall be maintained at all times.
3. Place BARRIERS and FLASHERS as needed to protect against an open trench through project limits.
4. Use SMALL BARRICADES with FLASHERS, DELINEATORS, REFLECTORIZED COLORS, and additional signs as required for public safety throughout the construction area. Signing shown are minimum requirements.
5. All sign code numbers refer to the STATE DIVISION of HIGHWAYS STANDARD SIGN CHART for colors and dimensions.
6. The contractor shall notify the following at least 48 hours prior to closing any street.

a. RESIDENT ENGINEER	787-2015
b. CITY TRAFFIC ENGINEER	787-7366
c. CITY POLICE DEPARTMENT	787-7011
d. CITY FIRE DEPARTMENT	787-7323
e. CALIF. RAPID TRANSIT DISTRICT	213-749-6977

PROJECT NO 1 - 0 - 062

RIVERSIDE COUNTY FLOOD CONTROL AND WATER CONSERVATION DISTRICT

LA SIERRA CHANNEL
MAGNOLIA DRAIN
STAGE I
TRAFFIC CONTROL

REFERENCE	DESCRIPTION	APPROVED	DATE

— REVISIONS —

Approved — Chief Engineer R.E. No 8822
Date
Designed R.A.
Drawn
Checked
Date Drawn
Sheet No 24 of 32
Dwg No 1-247

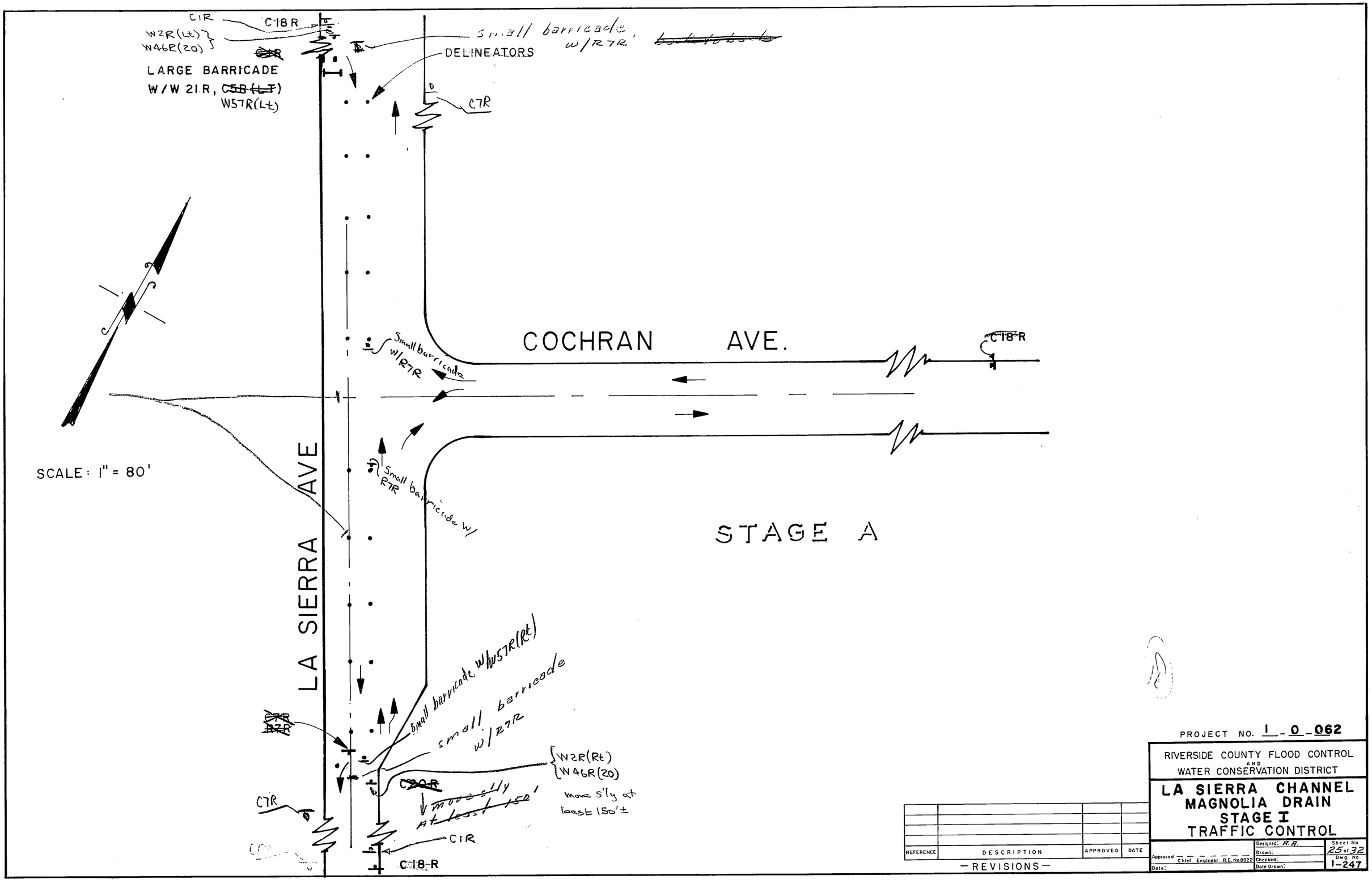
C1R
C18R
W2R(Lt)
W46R(20)
LARGE BARRICADE
W/W 21R, C5B (LT)
W57R(Lt)
small barricade w/R7R
DELINEATORS
C7R
COCHRAN AVE.
C18R
Small barricade w/R7R
LA SIERRA AVE
SCALE: 1" = 80'
Small R7R barricade w/
STAGE A
small barricade w/W57R(Rt)
small barricade w/R7R
W2R(Rt)
W46R(20)
C20R
more s'ly at least 150'±
C7R
C1R
C18R
PROJECT NO. 1-0-062
RIVERSIDE COUNTY FLOOD CONTROL AND WATER CONSERVATION DISTRICT
LA SIERRA CHANNEL
MAGNOLIA DRAIN
STAGE I
TRAFFIC CONTROL
REFERENCE
DESCRIPTION
APPROVED
DATE
REVISIONS
Approved
Chief Engineer R.E. No 8822
Date:
Designed: R.A.
Drawn:
Checked:
Date Drawn:
Sheet No 25 of 32
Dwg. No 1-247

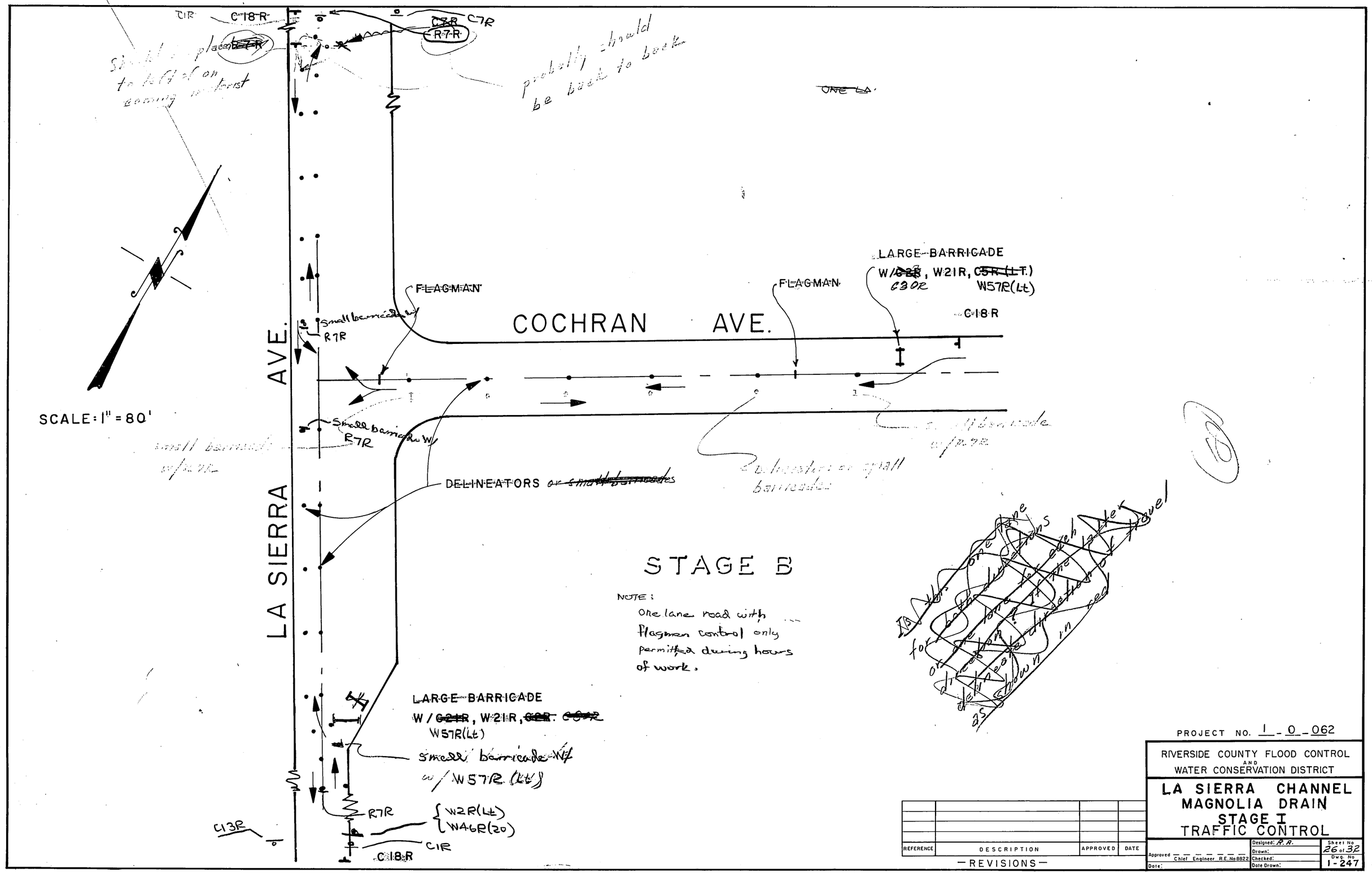
C1R
C18R
C3R
C7R
R7R
probably should be back to back
LARGE BARRICADE
W/ C30R, W21R, W57R(Lt)
FLAGMAN
FLAGMAN
C18R
COCHRAN AVE.
LA SIERRA AVE.
R7R
small barricade w/ R7R
small barricade w/ R7R
DELINEATORS
SCALE: 1" = 80'
STAGE B
NOTE:
One lane road with flagman control only permitted during hours of work.
LARGE BARRICADE
W/ W21R, W21R, W57R(Lt)
small barricade w/ W57R (Lt)
R7R
W2R(Lt)
W46R(20)
C1R
C18R
C13R
PROJECT NO. 1-0-062
RIVERSIDE COUNTY FLOOD CONTROL AND WATER CONSERVATION DISTRICT
LA SIERRA CHANNEL
MAGNOLIA DRAIN
STAGE I
TRAFFIC CONTROL
REFERENCE
DESCRIPTION
APPROVED
DATE
REVISIONS
Approved
Chief Engineer R.E. No 8822
Date:
Designed: R.R.
Drawn:
Checked:
Date Drawn:
Sheet No 26 of 32
Dwg. No 1-247

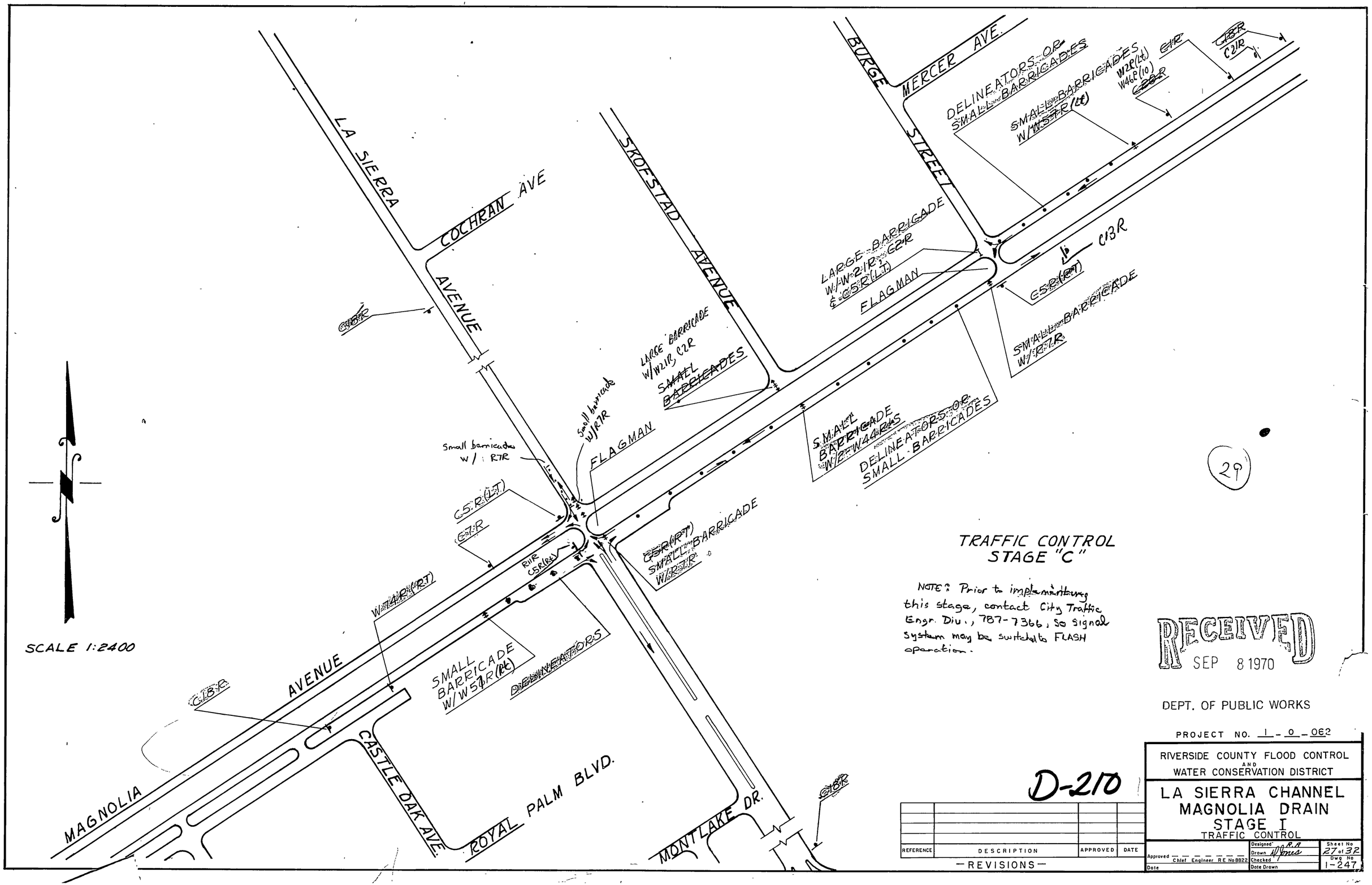
LA SIERRA
COCHRAN AVE
AVENUE
SKOFSTAD AVENUE
BURGE
MERCER AVE.
STREET
DELINEATORS OR
SMALL BARRICADES
SMALL BARRICADE
W/W57R (LT)
W2R(LT)
W4R(10)
C1R
C2R
C3R
LARGE BARRICADE
W/W21R, C2R
FLAGMAN
C5R(LT)
SMALL BARRICADE
W/R7R
LARGE BARRICADE
W/W21R, C2R
SMALL
BARRICADES
Small barricades
W/ R7R
FLAGMAN
SMALL
BARRICADE
W/W44R
DELINEATORS OR
SMALL BARRICADES
C5R(LT)
C7R
R11R
C5R(RT)
C5R(RT)
SMALL BARRICADE
W/R7R
W44R(RT)
SMALL
BARRICADE
W/W57R(RT)
DELINEATORS
C8R
AVENUE
MAGNOLIA
CASTLE OAK AVE.
ROYAL PALM BLVD.
MONTLAKE DR.
C8R
SCALE 1:2400
29
TRAFFIC CONTROL
STAGE "C"
NOTE: Prior to implementing this stage, contact City Traffic Engr. Div., 787-7366, so signal system may be switched to FLASH operation.
RECEIVED
SEP 8 1970
DEPT. OF PUBLIC WORKS
PROJECT NO. 1 - 0 - 062
D-210
REFERENCE
DESCRIPTION
APPROVED
DATE
REVISIONS
RIVERSIDE COUNTY FLOOD CONTROL AND WATER CONSERVATION DISTRICT
LA SIERRA CHANNEL
MAGNOLIA DRAIN
STAGE I
TRAFFIC CONTROL
Approved
Chief Engineer R.E. No 8822
Date
Designed R.A.
Drawn
Checked
Date Drawn
Sheet No 27 of 32
Dwg No 1-247

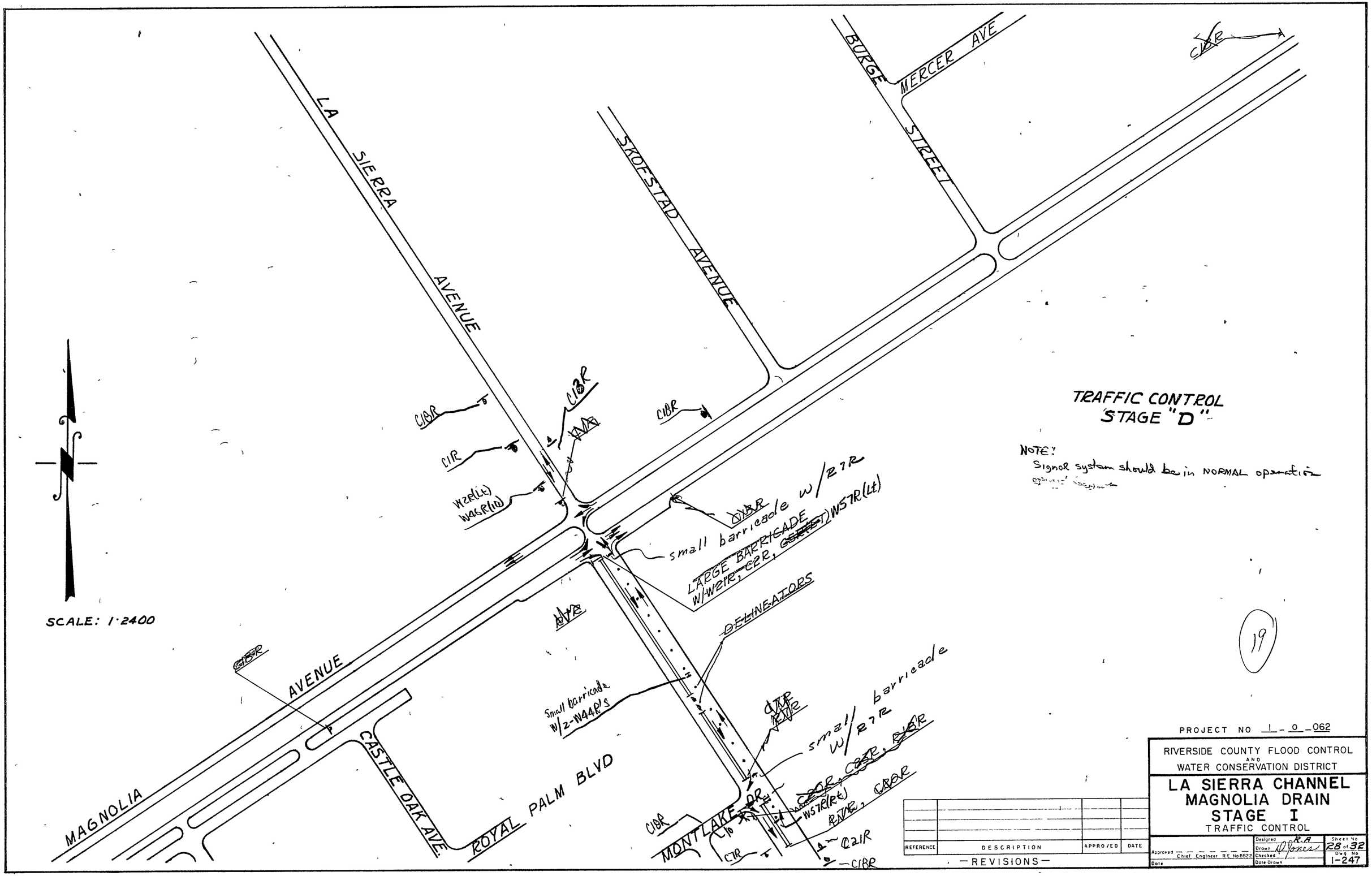
LA SIERRA AVENUE
SKOFSTAD AVENUE
BURGE STREET
MERCER AVE
MAGNOLIA AVENUE
CASTLE OAK AVE.
ROYAL PALM BLVD
MONTLAKE DR.
SCALE: 1·2400
TRAFFIC CONTROL
STAGE "D"
NOTE:
Signal system should be in NORMAL operation
C1BR
C1R
W12R(Lt)
W46R(Rt)
small barricade w/R7R
LARGE BARRIGADE
W/W21R, C2R, W57R(Lt)
DELINEATORS
Small barricade
W/2-W44R's
small barricade
W/R7R
W57R(Rt)
C21R
C2BR
19
PROJECT NO 1-0-062
RIVERSIDE COUNTY FLOOD CONTROL
AND
WATER CONSERVATION DISTRICT
LA SIERRA CHANNEL
MAGNOLIA DRAIN
STAGE I
TRAFFIC CONTROL
REFERENCE
DESCRIPTION
APPROVED
DATE
REVISIONS
Designed
Drawn
Checked
Date Drawn
Approved
Chief Engineer R.E. No.8822
Date
Sheet No
28 of 32
Dwg No
1-247

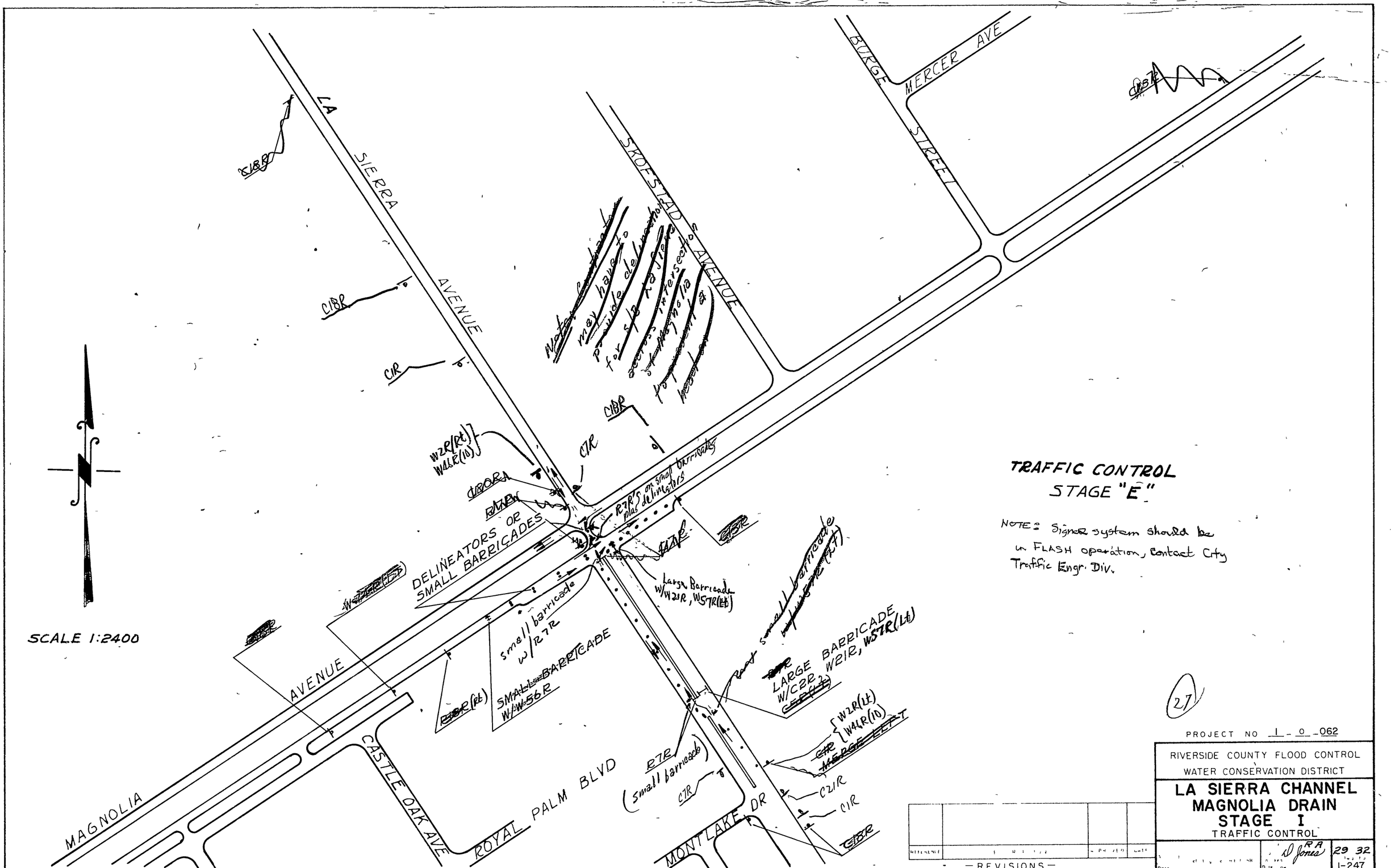

TRAFFIC CONTROL
STAGE "E"

NOTE: Signal system should be in FLASH operation, contact City Traffic Engr. Div.

27

PROJECT NO 1 - 0 - 062

RIVERSIDE COUNTY FLOOD CONTROL
WATER CONSERVATION DISTRICT

LA SIERRA CHANNEL
MAGNOLIA DRAIN
STAGE I
TRAFFIC CONTROL

— REVISIONS —

RA
D Jones
29 32
I-247

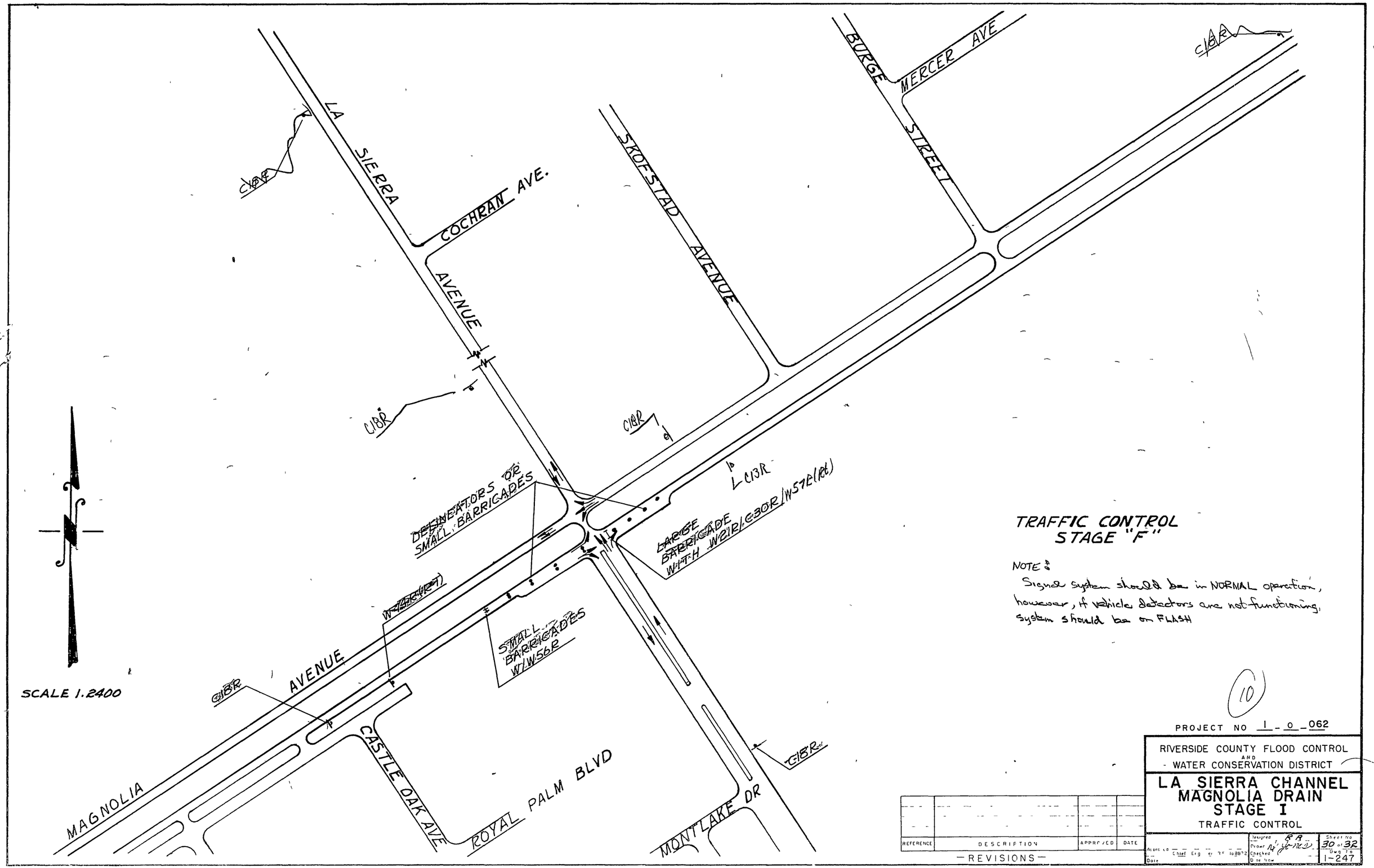

TRAFFIC CONTROL
STAGE "F"

NOTE:
Signal system should be in NORMAL operation, however, if vehicle detectors are not functioning, system should be on FLASH

(10)

PROJECT NO 1 - 0 - 062

RIVERSIDE COUNTY FLOOD CONTROL AND WATER CONSERVATION DISTRICT

LA SIERRA CHANNEL
MAGNOLIA DRAIN
STAGE I
TRAFFIC CONTROL

REFERENCE	DESCRIPTION	APPROVED	DATE

— REVISIONS —

Approved — Chief Engineer
Date
Designed R.R.
Drawn
Checked
Date Now
Sheet No 30 of 32
Dwg No 1-247

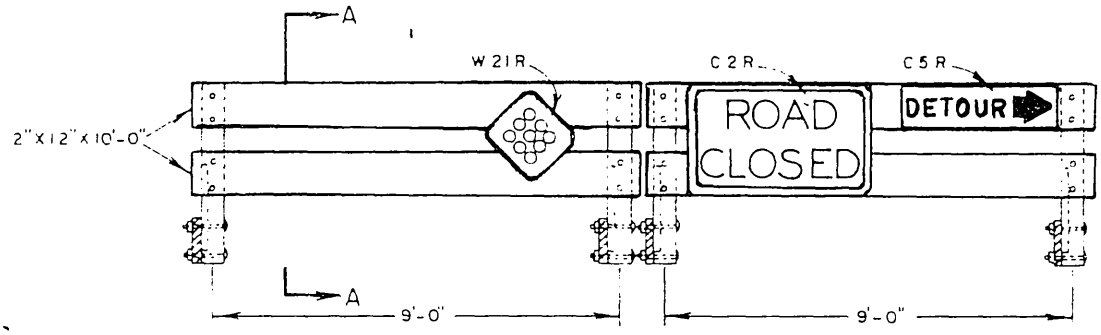

STANDARD BARRICADE WITH TYPICAL DETOUR SIGNS

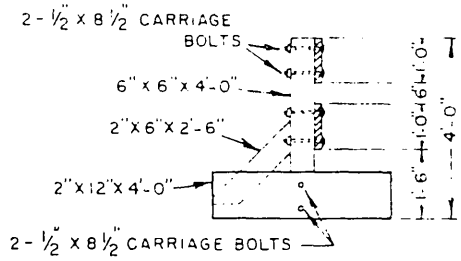

SECTION A-A

NOTE:

1- ALL LUMBER TO BE SELECT STRUCTURAL D.F. S4S.

2- Barricades to be given two coats of signal yellow paint after assembly.

3- Signs, reflectors, and barricades to be furnished and installed by the contractor as directed by the engineer.

PROJECT NO. 1-0-062

REVISED DATE	RIVERSIDE COUNTY FLOOD CONTROL AND WATER CONSERVATION DISTRICT		
	CONSTRUCTION BARRICADES		
	APPROVED CHIEF ENG R E NO 8822 DATE	DR	DATE / /
		TRAC	SH NO 31
		CHECKED	DWG 1-247

City of Riv. Std. No. 657

C1R

DETOUR AHEAD

C2R

ROAD CLOSED

C5R(LT)

DETOUR

C7R

END DETOUR

C14R

END ROAD WORK

C9R

FLAGMAN AHEAD

C13R

END CONSTRUCTION

C16R

ONE LANE ROAD AHEAD

C17

ROAD WORK SPEED LIMIT 25

END 25 MILE ZONE

C18R

ROAD CONSTRUCTION AHEAD

C19R

ROAD CLOSED AHEAD

C20R

LEFT LANE CLOSED AHEAD

C21R

SINGLE LANE AHEAD

C22R

MEN WORKING

C23R

ROAD WORK AHEAD

C5R(V)

DETOUR

R7R

KEEP RIGHT

Note: Refer to State of California, Dept. of Public Works, Div. of Highways, Uniform Sign Chart for the Color and Dimensions of the above signs.

D-210

PROJECT NO. 1-0-062.

REVISED DATE	RIVERSIDE COUNTY FLOOD CONTROL AND WATER CONSERVATION DISTRICT
	CONSTRUCTION SIGNS
	DR DATE / /
	APPROVED CHIEF ENG. R.E. NO. 8028 TRAC SH. NO. 32

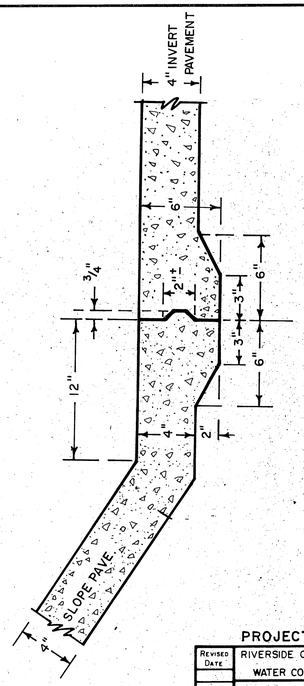

LONGITUDINAL CONSTRUCTION JOINT

NO SCALE

PROJECT NO. I-0-062

RIVERSIDE COUNTY FLOOD CONTROL AND WATER CONSERVATION DISTRICT

LONGITUDINAL CONSTRUCTION JOINT

REVISED	DATE	

DR. K.R.B. DATE 6/30/66
APPROVED CHIEF ENG. R.E. NO. 8822 DATE
TRAC. CHECKED
SH. NO. 10 DWG. I-247

DATA	A	B	C	D	E	F	G	H	I	J
DESIGN COVER	8'			8'						
WIDTH	10'			5'						
HEIGHT	5'			5'						
TOP SLAB T_1	9"			9"						
SIDE WALLS T_2	9"			9"						
BOTTOM SLAB T_3	10"			10"						
A BARS	#6@11			#6@11						
H	9'-1"			4'-6"						
B BARS	#5@7			#5@7						
H	2'-5½"			2'-5½"						
V	5'-2½"			5'-2½"						
C BARS	#5@18			#5@18						
D BARS	#6@11			#6@11						
H	9'-3½"			4'-6"						
E BARS	#5@7			#5@7						
H	2'-3"			2'-3"						
V	2'-8"			2'-8"						
CONCRETE CY/L.F.	0.951			0.66						
STEEL LBS/L.F.	143			79						
REMARKS										

DETAIL SCHEDULE

LOCATION SCHEDULE		
STATIONS FROM	STATIONS TO	BOX
0 + 27	18 + 36	A
TRANSITION		
18 + 36		A
18 + 56		D

NOTES

1. CONCRETE shall be Class "A"
2. ALL LONGITUDINAL BARS shall #4@18. Place bars in top and bottom slabs symmetrically about centerline. Place bars in walls symmetrically about mid-height of walls.
3. ALL QUANTITIES shown are approximate.
4. CLEAR COVER FOR STEEL shall be 1½" for top slab and side walls and 2" for each face of bottom slab.
5. STEEL is dimensioned to back of bar bend.
6. FOR CONSTRUCTION ON CURVES, straight transverse bars in top and bottom slabs shall be aligned radially with spacing measured at centerline. For straight bars and L-bars in walls, spacing shall be measured between the vertical legs of bars.
7. ALL TRANSVERSE CONSTR. JOINTS shall be in a vertical plane normal to the centerline and the spacing thereof shall not exceed 50 feet or be less than 10 feet. Continuous keyways will be required at all construction joints with #4 X 3 foot long dowels at 12" spacing placed at the center of sections with one end wrapped to prevent bond. A complete curtain of transverse steel shall be placed three inches from each face of the joint and longitudinal steel will not be continuous through the joint.
8. THE WALLS AND TOP SLAB may be poured monolithic, but after walls have been poured, a delay of not less than 2 hours shall be made before pouring of the top slab is started.

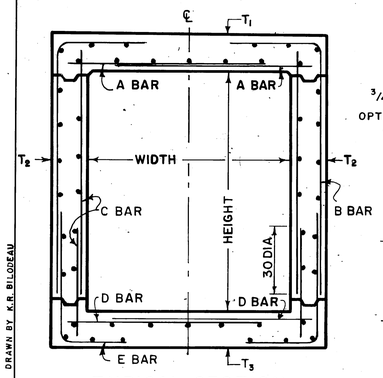

TYPICAL SECTION

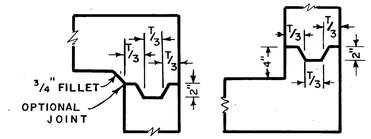

TOP JOINT BOTTOM JOINT

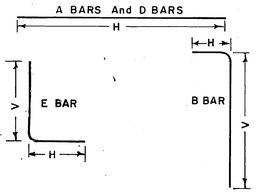

BAR DIAGRAM

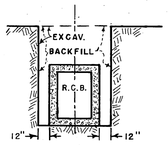

PAY LINES

DRAWN BY K.R. BILODEAU

PROJECT NO. I-0-062

RIVERSIDE COUNTY FLOOD CONTROL AND WATER CONSERVATION DISTRICT

SINGLE CELL R.C.B. STRUCTURAL DETAILS

Approved Chief Engineer R.E. No. 8822 Date 7-19-70
Designed Kris Bilodeau
Drawn K.R.B. Date 6/30/66
Checked
Sheet No. 11
Dwg. No. I-247

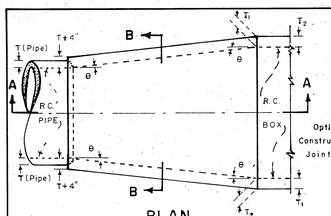

PLAN

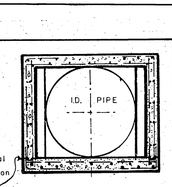

SECTION B-B

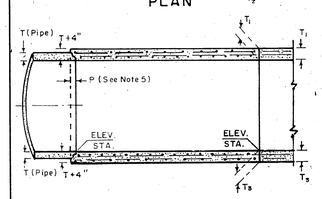

SECTION A-A

NOTES

1. The horizontal angle of divergence or convergence, θ, shall not exceed 5°45'
2. Reinforce steel bars sizes, spacing, pattern and cover over the steel shall be that of the box section. The bar lengths shall vary uniformly throughout the transition.
3. The concrete thickness shall be that of the box section unless the wall thickness of the pipe plus 4 inches is greater, in which case the concrete thickness shall vary uniformly from that of the box section to that of the pipe wall plus 4" inches.
4. The interior surface shall be smooth and vary uniformly between the two adjoining sections.
5. At pipe juncture, embedment P shall be 5 inches for pipe sizes of 96 inches or less and 8 inches for pipe sizes over 96 inches.
6. Keyed construction joints of the same dimensions as those of the box may be carried through the transition structure at contractor's option. See Sec. B-B above.
7. The transition structure shall be constructed in accordance with the general structural notes applying to box as shown on the project drawings.
8. Concrete shall be Class A.

PROJECT NO. I-0-062

RIVERSIDE COUNTY FLOOD CONTROL AND WATER CONSERVATION DISTRICT

TRANSITION STRUCTURE NO. 1

Approved Chief Engineer R.E. No. 8822 Date
Designed L.A.F.C.D.
Drawn K.R.B.
Checked F.R.
Date Drawn 7/10/68
Sheet No. 12-32
Dwg. No. I-247

L.A.F.C.D. NO. 2-0235

L.A.C.F.C. 2-0189

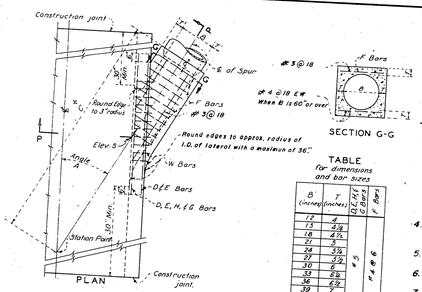

TABLE
For dimensions and bar sizes

B' (inches)	T (inches)	D, E, H, G Bars	F Bars
12	4	#5	#4
13	4¼		
18	4¾		
21	5		
24	5½		
27	5¾		
30	6		
33	6¼		
36	6½		
39	7	#6	#5
42	7½		
45	7¾		
48	8		
51	8¼		
54	8½		
57	9¼		
60	9½		
63	10		
66	10¼		
69	10½		
72	11		
78	11¾	#7	#6
84	12½		
90	13¼		
96	14		
102	13¾		
108	16		
114	16½		
120	17		
126	17		
132	17½		
138	17¾		
144	18		

NOTES

1. Values for A, B, C, Elev. R, and Elev. S are shown on the Project Dwgs. Table of Values for T shown on this plan.
2. Stations specified on drawings apply at the intersection of center lines of main line and laterals, except that stations for catch basin connector pipe apply at inside wall of structure.
3. Reinforcing steel shall be straight bars 1½" clear from face of concrete unless otherwise shown.

   W bars are of size and spacing specified for wall steel on plan, and shall be cut in center of opening and bent into top and bottom of junction structure.

   Omit H bars when soffit of spur is 12" or less below soffit of main line, and omit G bars when invert of spur is 12" or less above floor of main line.
4. Junction structure shall be poured monolithically with main line storm drain, manhole or transition.
5. Floor of structure shall be steel-troweled to the spring line.
6. f'c = 3000 psi at 28 days.
7. Embedment, P, shall be 5" for B = 96" or less and 8" for B over 96".
8. Backfill under structure with 1-3-5 mix concrete, or compact soil to relative density required by specifications. Backfill may be omitted if structure is laid on undisturbed earth to storm drain wall.

RECEIVED
SEP 8 1970
DEPT. OF PUBLIC WORKS

D-210

PROJECT NO. I-0-062

RIVERSIDE COUNTY FLOOD CONTROL AND WATER CONSERVATION DISTRICT

JUNCTION STRUCTURE NO. 5

Approved Chief Engineer R.E. No. 8822 Date
Designed
Drawn Kris Bilodeau
Checked
Date Drawn 4/18/1970
Sheet No. 12-32
Dwg. No. I-247

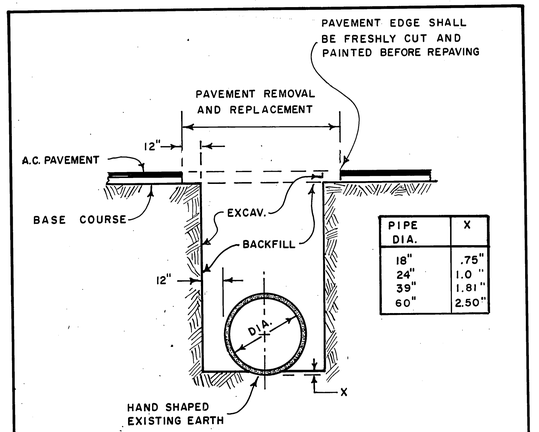

PIPE DIA.	X
18"	.75"
24"	1.0 "
39"	1.81 "
60"	2.50"

PIPE BEDDING FOR CLAY AND CONCRETE PIPE UNLESS OTHERWISE SPECIFIED.

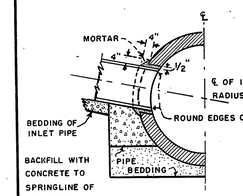

TYPICAL LATERAL CONNECTION

PROJECT NO. 1-0-062

Revised Date	RIVERSIDE COUNTY FLOOD CONTROL AND WATER CONSERVATION DISTRICT
	PIPE BEDDING DETAILS

APPROVED ____ CHIEF ENG. R.E. NO. 8822 DATE ____ | DR. J.H. DATE / / | TRAC. K.R.B. | SH. NO. 1-6 | CHECKED ____ | DWG. 1-247

L.A.C.F.C.D. 2-0162 2-0163

SEE STANDARD: MANHOLE FRAME AND COVER FOR CATCH BASINS.

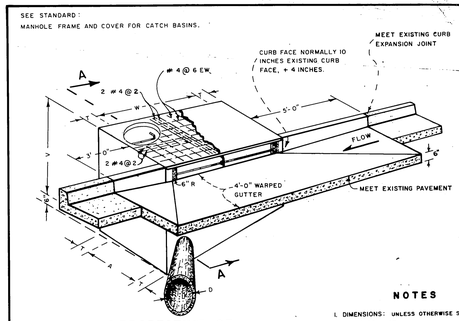

PERSPECTIVE OF CATCH BASIN NO. 1

NOTES

1. DIMENSIONS: UNLESS OTHERWISE SPECIFIED.
   V = 5.25 FEET.
   V' = 3.0 FEET.
   W = 7 FEET.
   T = 8 INCHES IF V IS LESS THAN 8 FEET.
   T = 10 INCHES IF V IS 8 FEET OR MORE.
   D = 18 INCHES.
   A = D PLUS 12 INCHES.
   (38 INCHES MIN.)
2. CONCRETE SHALL BE CLASS "A" P.C.C. (6.0 SACK)
3. THE SURFACE OF ALL EXPOSED CONC. SHALL CONFORM TO SLOPE, GRADE, COLOR, FINISH AND SCORING IN THE EXISTING OR PROPOSED CURB AND WALK ADJACENT TO THE BASIN. THE BASIN FLOOR SHALL BE GIVEN A TIGHT WOOD FLOAT FINISH. CURVATURE OF THE LIP AND SIDEWALLS AT THE GUTTER OPENING SHALL NOT BE MADE BY PLASTERING. THE OUTLET PIPE SHALL BE TRIMMED TO FINAL SHAPE AND LENGTH BEFORE THE CONCRETE IS POURED.
4. STEPS: 3/4 INCH PLAIN ROUND GALVANIZED STEEL STEPS SHALL BE INSTALLED 12 INCHES APART WHEN V EXCEEDS 4 FEET 6 INCHES. THE TOP STEP SHALL BE 6 INCHES BELOW THE SURFACE AND SHALL BE 2 1/2 INCHES CLEAR FROM THE WALL. ONLY ONE STEP 12 INCHES FROM THE BOTTOM SHALL BE INSTALLED IF V IS 4 FEET 6 INCHES OR LESS. THE STEPS SHALL BE ANCHORED NOT LESS THAN 4 INCHES IN THE WALL OF THE BASIN.

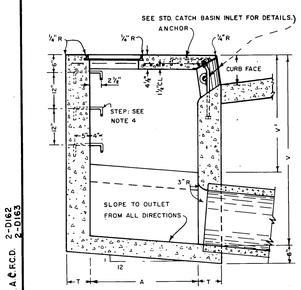

SECTION A-A

PROJECT NO. 1-0-062

RIVERSIDE COUNTY FLOOD CONTROL AND WATER CONSERVATION DISTRICT
CATCH BASIN NO. 1

Approved Chief Engineer R.E. No. 8822 Date ____ | Designed L.A.C.F.C.D. | Drawn K.R.B. | Checked J.H. | Date 12-8-69 | Sheet No. 1 of 1 | Drawing No. 1-247

L.A.F.C.D. NO. 2-0232 CITY OF L.A. NO. B-3651

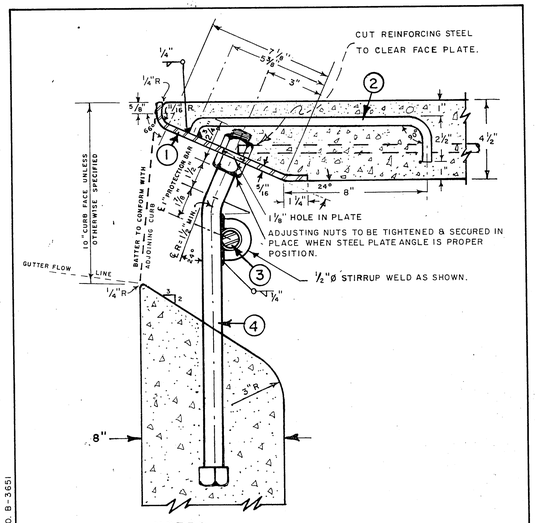

NOTES

1. FACE PLATE 5/16" X 10" ROLLED PLATE (ASTM A7) FORMED AS SHOWN.
2. FACE PLATE ANCHORAGE 1/2" ø STEEL ANCHOR 42" OC MAX. PLACED AS SHOWN.
3. PROTECTION BAR A PLAIN ROUND STEEL BAR 1" DIA. SHALL BE INSTALLED, BAR SHALL BE EMBEDDED 5 INCHES AT EACH END.
4. SUPPORT BAR 1 INCH DIA. X 20" LONG WITH SQ. HEAD AND HEX. NUTS, BEND AS SHOWN. SPACING SHALL NOT EXCEED 4 FEET.
5. ALL EXPOSED METAL PARTS SHALL BE GALVANIZED.

PROJECT NO. 1-0-062

RIVERSIDE COUNTY FLOOD CONTROL AND WATER CONSERVATION DISTRICT
DETAIL OF CATCH BASIN OPENING

Approved Chief Engineer R.E. No. 8822 Date ____ | Designed L.A.C.F.C.D. | Drawn K.R.B. | Checked J.H. | Date 12-8-69 | Sheet No. 1 of 1 | Drawing No. 1-247

L.A.C.F.C. Std. No. 2-0156
City of L.A. Std. B-2189

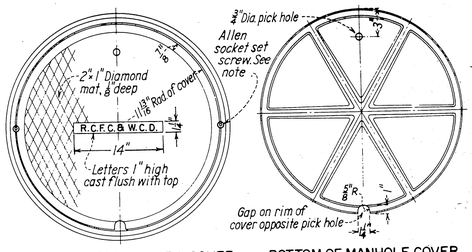

TOP OF MANHOLE FRAME & COVER

BOTTOM OF MANHOLE COVER

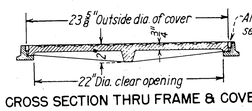

CROSS SECTION THRU FRAME & COVER

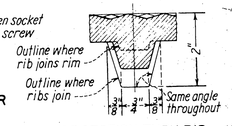

CROSS SECTION THRU RIB AT MID RADIUS

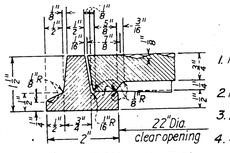

CROSS SECTION THRU RIM

NOTES

1. Frame and cover shall be gray cast iron conforming to the latest A.S.T.M. standard A48, class 30 or better.
2. Install two 3/4" x 3/4" Allen socket set screws, 90° to pick hole, in holes drilled and tapped 1" in depth.
3. All parts of the frame and cover except machined surfaces shall be coated with asphaltum paint.
4. Frame and cover shall be tested for accuracy of fit and shall be marked in sets before delivery.

RECEIVED SEP 8 1970 DEPT. OF PUBLIC WORKS D-210

PROJECT NO. 1-0-062

Revised Date	RIVERSIDE COUNTY FLOOD CONTROL AND WATER CONSERVATION DISTRICT
	MANHOLE FRAME & COVER FOR CATCH BASINS

APPROVED ____ CHIEF ENG. R.E. NO. 8822 DATE ____ | DR. ____ DATE / / | TRAC. ____ | SH. NO. 1/7 | CHECKED ____ | DWG. 1-247

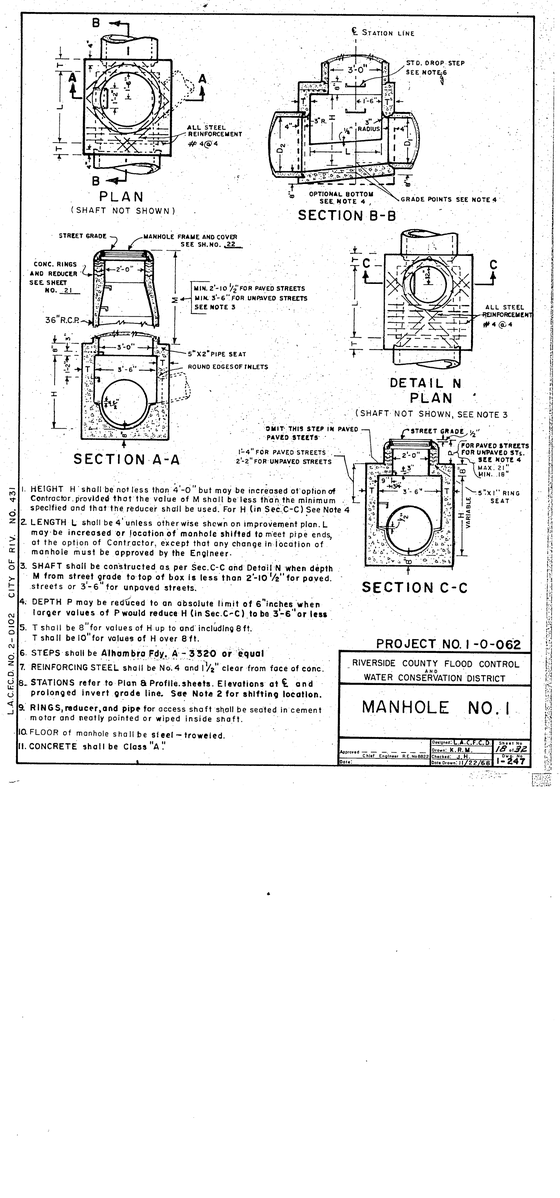

1. HEIGHT H shall be not less than 4'-0" but may be increased at option of Contractor provided that the value of M shall be less than the minimum specified and that the reducer shall be used. For H (in Sec.C-C) See Note 4
2. LENGTH L shall be 4' unless otherwise shown on improvement plan. L may be increased or location of manhole shifted to meet pipe ends, at the option of Contractor, except that any change in location of manhole must be approved by the Engineer.
3. SHAFT shall be constructed as per Sec.C-C and Detail N when depth M from street grade to top of box is less than 2'-10½" for paved streets or 3'-6" for unpaved streets.
4. DEPTH P may be reduced to an absolute limit of 6" inches when larger values of P would reduce H (in Sec.C-C) to be 3'-6" or less
5. T shall be 8" for values of H up to and including 8 ft. T shall be 10" for values of H over 8 ft.
6. STEPS shall be Alhambra Fdy. A-3320 or equal
7. REINFORCING STEEL shall be No. 4 and 1½" clear from face of conc.
8. STATIONS refer to Plan & Profile sheets. Elevations at ℄ and prolonged invert grade line. See Note 2 for shifting location.
9. RINGS, reducer, and pipe for access shaft shall be seated in cement mortar and neatly pointed or wiped inside shaft.
10. FLOOR of manhole shall be steel-troweled.
11. CONCRETE shall be Class "A".

PROJECT NO. 1-0-062

RIVERSIDE COUNTY FLOOD CONTROL AND WATER CONSERVATION DISTRICT

MANHOLE NO. 1

Designed: L.A.C.F.C.D. | Scale: | Date: 10-1-62
Drawn: R. R. M.
Approved: Chief Engineer R.E. No. 8822 | Checked: J.N.
Date: | Date Drawn: 11/22/68 | 1-247

L.A.C.F.C.D. NO. 2-0102 CITY OF RIV. NO. 431

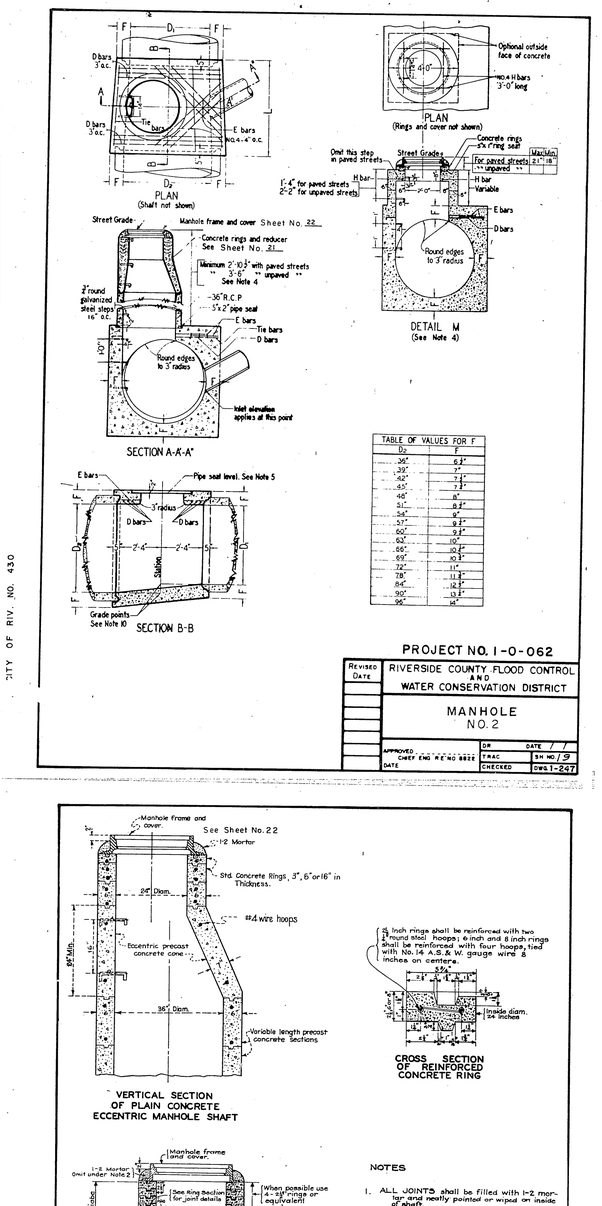

TABLE OF VALUES FOR F	
D_2	F
36"	6 1/2"
39"	7"
42"	7 1/2"
45"	7 3/4"
48"	8"
51"	8 1/2"
54"	9"
57"	9 1/2"
60"	9 3/4"
63"	10"
66"	10 1/2"
69"	10 3/4"
72"	11"
78"	11 3/4"
84"	12 1/2"
90"	13 1/2"
96"	14"

PROJECT NO. 1-0-062

RIVERSIDE COUNTY FLOOD CONTROL AND WATER CONSERVATION DISTRICT

MANHOLE NO. 2

APPROVED: CHIEF ENG. R.E. NO. 8822 | DR | DATE / / | TRAC | SH. NO. 19 | CHECKED | DWG. 1-247

CITY OF RIV. NO. 430

NOTES FOR MANHOLE NO. 2

1. - CENTER OF MANHOLE SHAFT shall be located over center line of storm drain when diameter D_1 is 48" or less, in which case place E bars symmetrically around shaft at 45° with center line.
2. - LENGTH L shall be 5'-6" unless shown otherwise on improvement plan. At option of Contractor L may be increased or location of manhole shifted to meet pipe ends.
3. - DETAIL M: When depth of manhole from street grade to top of box is less than 2'-10½" for paved streets or 3'-6" for unpaved streets, construct monolithic shaft as per Detail M. The Contractor shall have the option of constructing shaft as per Detail M for any depth of manhole. When diameter D_1 is 48" or less, center of shaft shall be located as per Note 2.
4. - THICKNESS OF DECK shall vary when necessary to provide level pipe seat, but shall not be less than tabular values for F shown on this plan.
5. - REINFORCING STEEL shall be round, deformed bars, 1½" clear from face of concrete unless shown otherwise. Sizes and lengths are shown in table below.
6. - CONCRETE shall be class A.
7. - STEPS shall be ¾" round, galvanized steel and anchored not less than 6 inches in the walls of structure. Unless otherwise shown the spacing shall be 16" on centers. The lowest step shall be not more than 2'-6" above the invert. (Alhambra Fdy. A-3320, or equal.)
8. - RINGS, REDUCER, AND PIPE for access shaft shall be sealed in cementmortar and neatly pointed or wiped inside the shaft.
9. - STATIONS of manholes shown on improvement plan apply at center of shaft. Elevations shown at stations, refer to prolonged invert grade lines.
10. - FLOOR of manhole shall be steel-troweled to springing line.
11. - BODY of manhole shall be poured in one continuous operation, except that the Contractor shall have the option of placing at the springing line a construction joint with a longitudinal keyway.

STEEL TABLE FOR MANHOLE							
	D bars			E bars			
Diam. D_2	No. Req'd.	Size	Length	No. Req'd.	Size	Length
36"	6	No. 4	3'-10"	4	No. 4	2'-9"
39"	6	"	4'-2"	4	"	2'-11"
42"	6	No. 5	4'-6"	4	"	3'-2"
45"	6	"	4'-10"	4	"	3'-4"
48"	6	"	5'-1"	4	"	3'-7"
51"	6	"	5'-5"	6	"	3'-9"
54"	6	"	5'-9"	6	"	3'-11"
57"	6	"	6'-1"	6	"	4'-1"
60"	6	"	6'-5"	6	"	4'-3"
63"	6	"	6'-8"	6	"	4'-5"
66"	6	"	7'-0"	6	"	4'-8"
69"	6	"	7'-4"	8	"	4'-8"
72"	6	"	7'-7"	8	"	4'-8"
78"	6	"	8'-3"	8	"	4'-8"
84"	6	"	8'-10"	10	"	4'-8"
90"	8	No. 6	9'-6"	10	"	4'-8"
96"	8	"	10'-1"	10	"	4'-8"

D bars shall be spaced 3" o.c. E bars shall be spaced 4" o.c. Tie bars shall be No. 3 spaced 18" o.c. or closer.
When L greater than 5'-6" is specified on improvement plan, continue D bars at 6" o.c.
Lengths shown in table are for longest bars. Where shorter bars are required, bend or cut to meet field requirements.

PROJECT NO. 1-0-062

RIVERSIDE COUNTY FLOOD CONTROL AND WATER CONSERVATION DISTRICT

MANHOLE NO. 2

APPROVED: CHIEF ENG. R.E. NO. 8822 | DR | DATE / / | TRAC. | SH. NO. 19A | CHECKED | DWG. 1-247

CITY OF RIV. NO. 430, CITY OF L.A. NO. B-1700

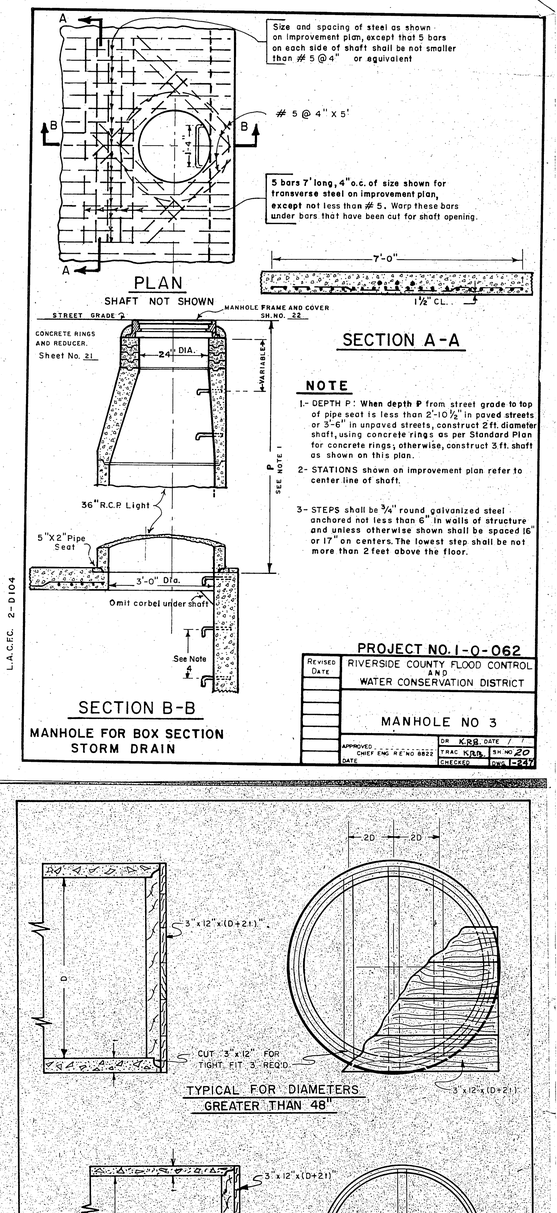

NOTE

1.- DEPTH P: When depth P from street grade to top of pipe seat is less than 2'-10½" in paved streets or 3'-6" in unpaved streets, construct 2 ft. diameter shaft, using concrete rings as per Standard Plan for concrete rings; otherwise, construct 3 ft. shaft as shown on this plan.

2- STATIONS shown on improvement plan refer to center line of shaft.

3- STEPS shall be ¾" round galvanized steel anchored not less than 6" in walls of structure and unless otherwise shown shall be spaced 16" or 17" on centers. The lowest step shall be not more than 2 feet above the floor.

PROJECT NO. 1-0-062

RIVERSIDE COUNTY FLOOD CONTROL AND WATER CONSERVATION DISTRICT

MANHOLE NO 3

APPROVED: CHIEF ENG. R.E. NO. 8822 | DR K.R.B. | DATE / / | TRAC K.R.B. | SH. NO. 20 | CHECKED | DWG. 1-247

L.A.C.F.C. 2-0104

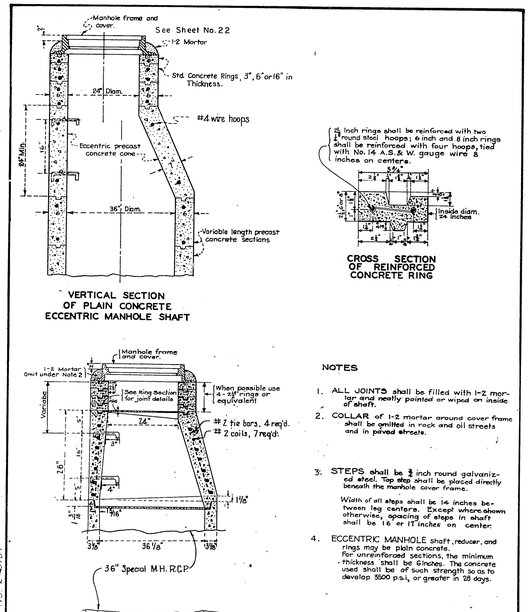

NOTES

1. ALL JOINTS shall be filled with 1:2 mortar and neatly pointed or wiped on inside of shaft.
2. COLLAR of 1:2 mortar around cover frame shall be omitted in rock and oil streets and in paved streets.
3. STEPS shall be ¾ inch round galvanized steel. Top step shall be placed directly beneath the manhole cover frame.
   Width of all steps shall be 14 inches between leg centers. Except where shown otherwise, spacing of steps in shaft shall be 16 or 17 inches on center.
4. ECCENTRIC MANHOLE shaft, reducer, and rings may be plain concrete.
   For unreinforced sections, the minimum thickness shall be 6 inches. The concrete used shall be of such strength so as to develop 3500 p.s.i. or greater in 28 days.

PROJECT NO. 1-0-062

RIVERSIDE COUNTY FLOOD CONTROL AND WATER CONSERVATION DISTRICT

MANHOLE SHAFT FOR CAST PIPE

APPROVED: CHIEF ENG. R.E. NO. 8822 | DR | DATE / / | TRAC | SH. NO. 21 | CHECKED | DWG. 1-247

L.A.C.F.C. Std. No. 2-0181 City of L.A. Std. B-2855

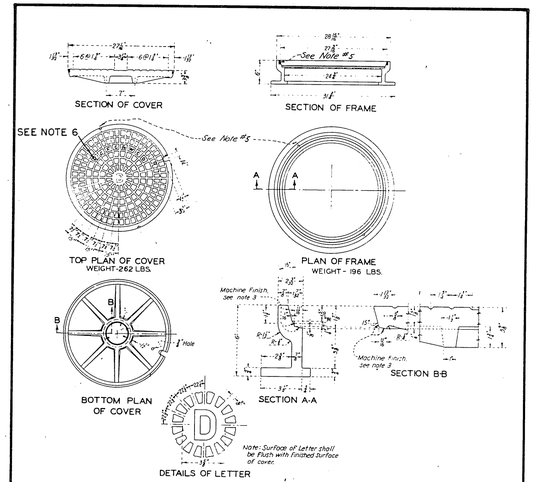

NOTES

1. The Manhole Frame and Cover shall be made of gray cast iron conforming to the latest A.S.T.M. standard A-48, class 30 or better.
2. All parts of the Manhole Frame and Cover except machined surfaces shall be coated with asphaltum paint.
3. The Manhole Frame and Cover shall be tested for accuracy of fit and shall be marked in sets before delivery. The Cover shall fit the frame snugly but not tightly.
4. The weights of the frame and Cover shall not vary more than two percent from those given hereon.
5. Covers for manholes located in road of ways, easements, alleys, parkways and all other places except paved streets shall be provided with Allen socket set screw locking devices. The Contractor shall drill and tap two holes to a depth of 1" at 90° to pick hole and install ⅜" x ⅜" allen socket set screws therein.
6. Cast Letters R.C.F.C. & W.C.D.

PROJECT NO. 1-0-062

RIVERSIDE COUNTY FLOOD CONTROL AND WATER CONSERVATION DISTRICT

MANHOLE FRAME & COVER NON-ROCKING

APPROVED: CHIEF ENG. R.E. NO. 8822 | DR | DATE / / | TRAC | SH. NO. 22 | CHECKED | DWG. 1-247

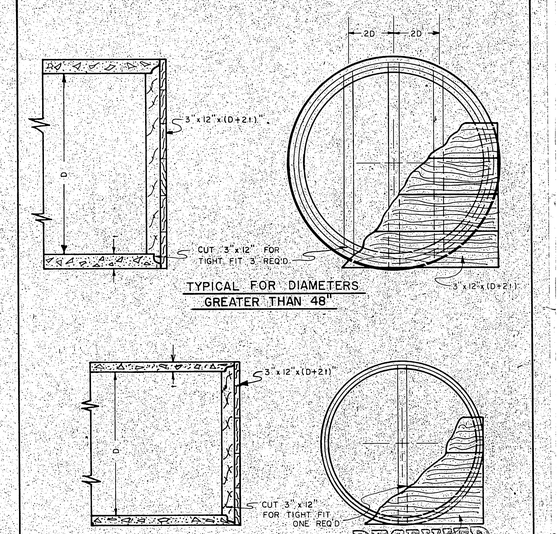

RECEIVED SEP. 8 1970 DEPT. OF PUBLIC WORKS

NOTES:

1. NAIL 3" x 12" TO VERTICAL SUPPORTS WITH 40d GALV. NAILS 3" %.
2. ALL LUMBER SHALL BE CREOSOTED DOUGLAS FIR, 1500 f CONSTRUCTION GRADE.

PROJECT NO. 1-0-062

RIVERSIDE COUNTY FLOOD CONTROL AND WATER CONSERVATION DISTRICT

TIMBER BULKHEADS

Designed: R.R. | Scale: | Date: 2-1-62
Drawn: | Approved: Chief Engineer R.E. No. 8822 | Checked: J.N.
Date: | Date Drawn: | 1-247

D-210

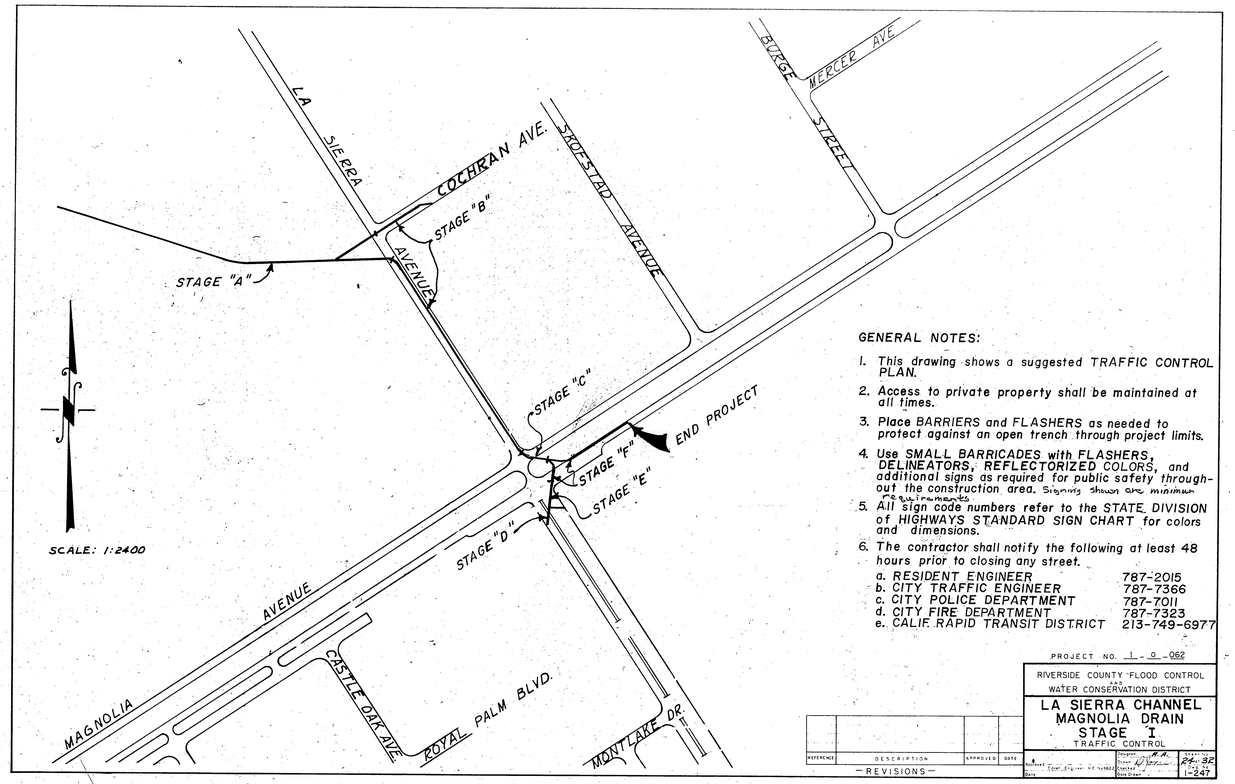

GENERAL NOTES:

1. This drawing shows a suggested TRAFFIC CONTROL PLAN.
2. Access to private property shall be maintained at all times.
3. Place BARRIERS and FLASHERS as needed to protect against an open trench through project limits.
4. Use SMALL BARRICADES with FLASHERS, DELINEATORS, REFLECTORIZED COLORS, and additional signs as required for public safety throughout the construction area. Signing shown are minimum requirements.
5. All sign code numbers refer to the STATE DIVISION of HIGHWAYS STANDARD SIGN CHART for colors and dimensions.
6. The contractor shall notify the following at least 48 hours prior to closing any street.

a. RESIDENT ENGINEER	787-2015
b. CITY TRAFFIC ENGINEER	787-7366
c. CITY POLICE DEPARTMENT	787-7011
d. CITY FIRE DEPARTMENT	787-7323
e. CALIF. RAPID TRANSIT DISTRICT	213-749-6977

PROJECT NO. 1-0-062

RIVERSIDE COUNTY FLOOD CONTROL AND WATER CONSERVATION DISTRICT

LA SIERRA CHANNEL
MAGNOLIA DRAIN
STAGE I
TRAFFIC CONTROL

REFERENCE	DESCRIPTION	APPROVED	DATE

—REVISIONS—

Approved: Chief Engineer R.E. No.8824 Date:
Designed: R.R. Drawn: W. Wright Checked: Date Drawn:
Sheet No. 26-32 Dwg. No. 1-247

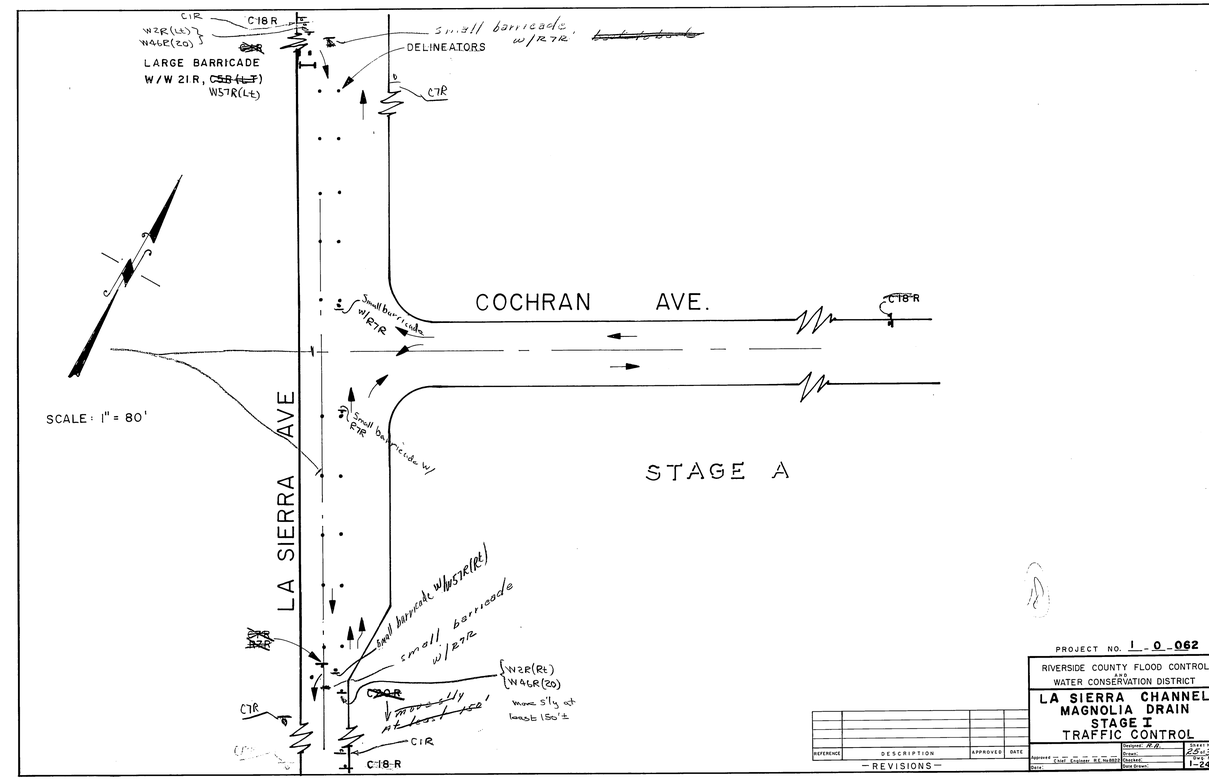

PROJECT NO. 1-0-062

RIVERSIDE COUNTY FLOOD CONTROL AND WATER CONSERVATION DISTRICT

LA SIERRA CHANNEL
MAGNOLIA DRAIN
STAGE I
TRAFFIC CONTROL

REFERENCE	DESCRIPTION	APPROVED	DATE

—REVISIONS—

Approved: Chief Engineer R.E. No.8824 Date:
Designed: R.R. Drawn: W. Wright Checked: Date Drawn:
Sheet No. 26-32 Dwg. No. 1-247

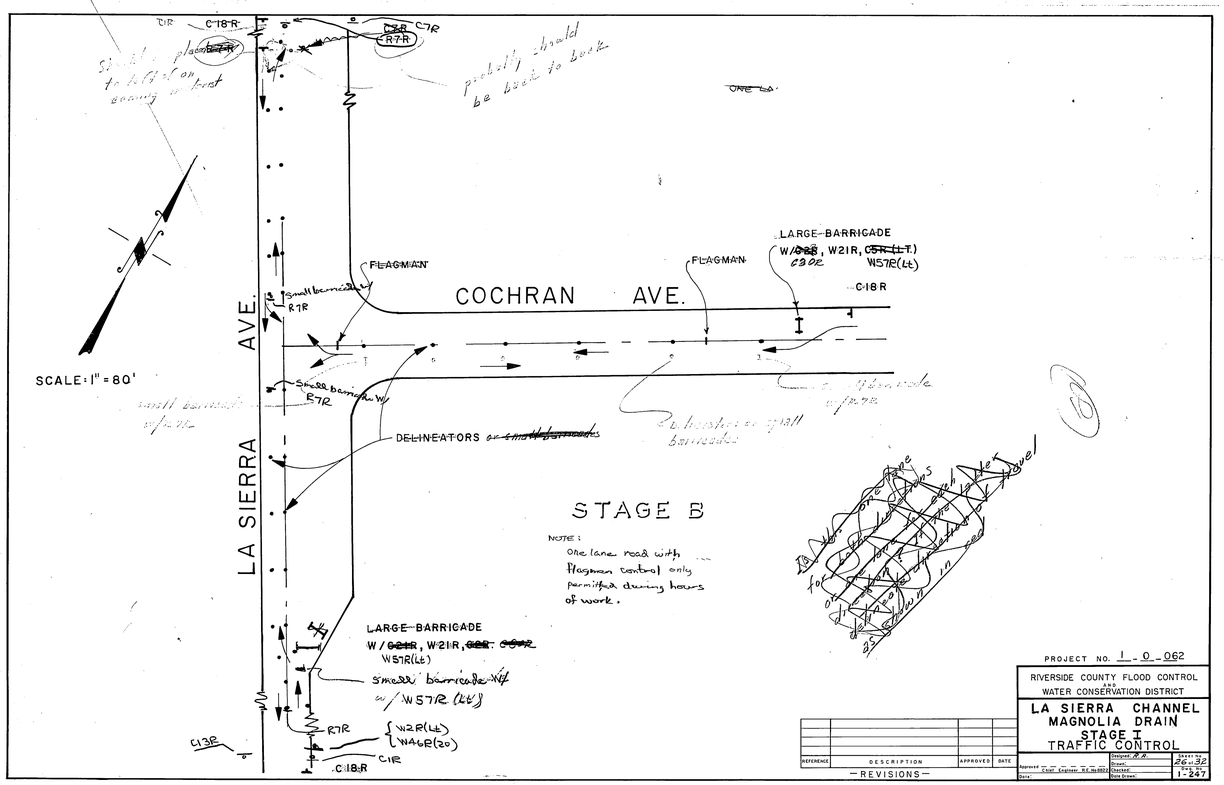

PROJECT NO. 1-0-062

RIVERSIDE COUNTY FLOOD CONTROL AND WATER CONSERVATION DISTRICT

LA SIERRA CHANNEL
MAGNOLIA DRAIN
STAGE I
TRAFFIC CONTROL

REFERENCE	DESCRIPTION	APPROVED	DATE

—REVISIONS—

Approved: Chief Engineer R.E. No.8824 Date:
Designed: R.R. Drawn: W. Wright Checked: Date Drawn:
Sheet No. 26-32 Dwg. No. 1-247

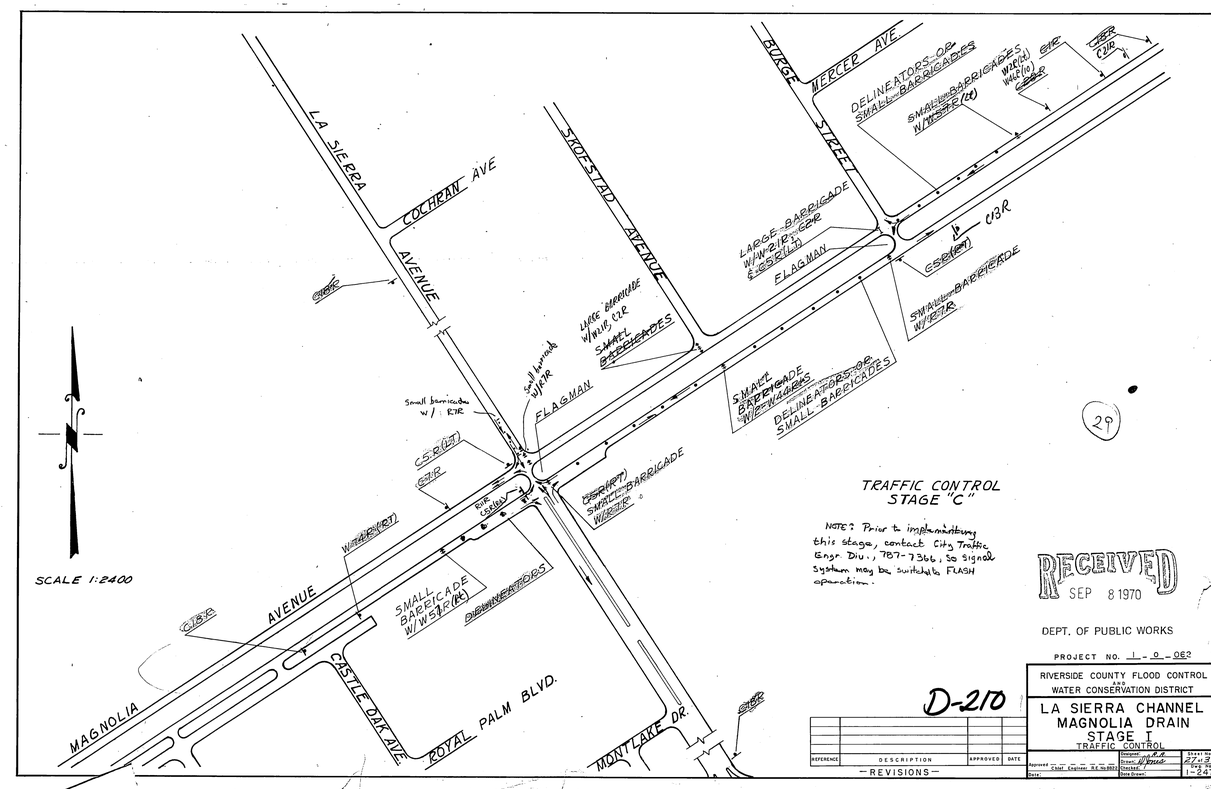

RECEIVED
SEP 8 1970
DEPT. OF PUBLIC WORKS

PROJECT NO. 1-0-062

RIVERSIDE COUNTY FLOOD CONTROL AND WATER CONSERVATION DISTRICT

LA SIERRA CHANNEL
MAGNOLIA DRAIN
STAGE I
TRAFFIC CONTROL

REFERENCE	DESCRIPTION	APPROVED	DATE

—REVISIONS—

Approved: Chief Engineer R.E. No.8824 Date:
Designed: R.R. Drawn: W. Wright Checked: Date Drawn:
Sheet No. 26-32 Dwg. No. 1-247

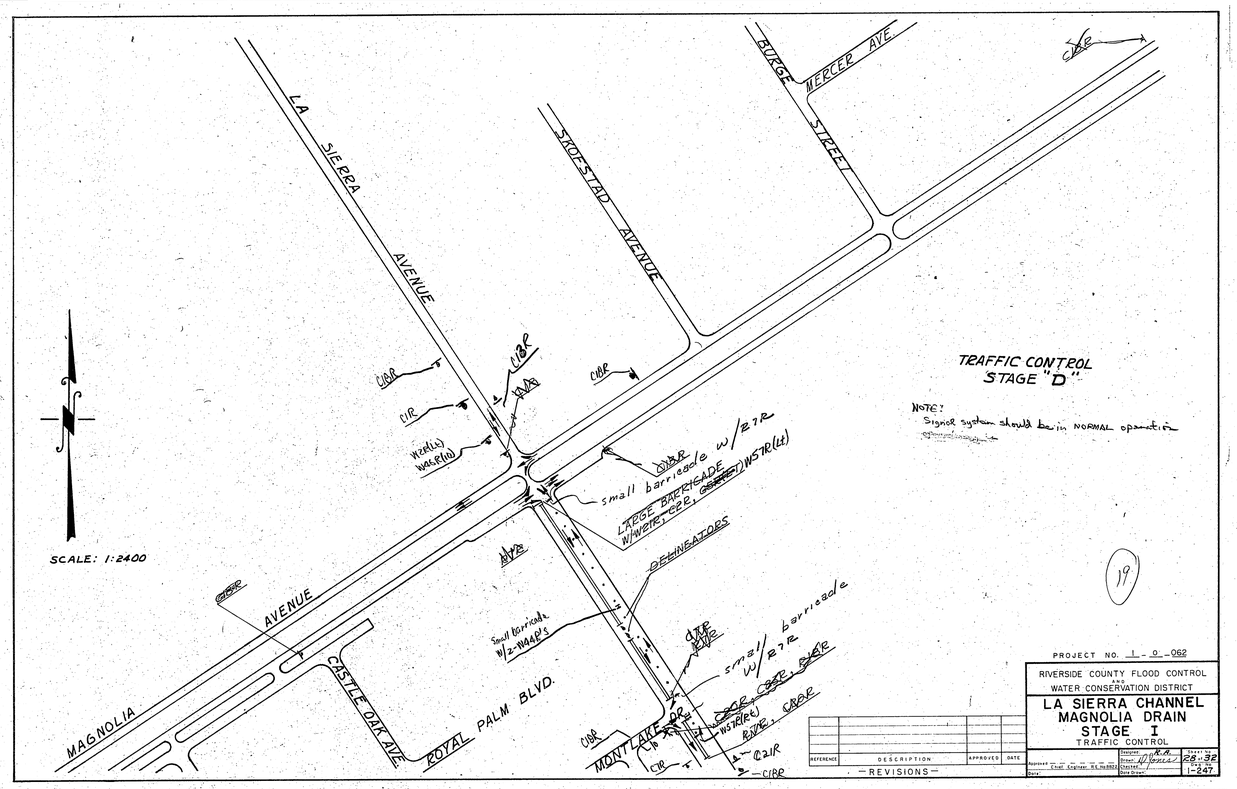

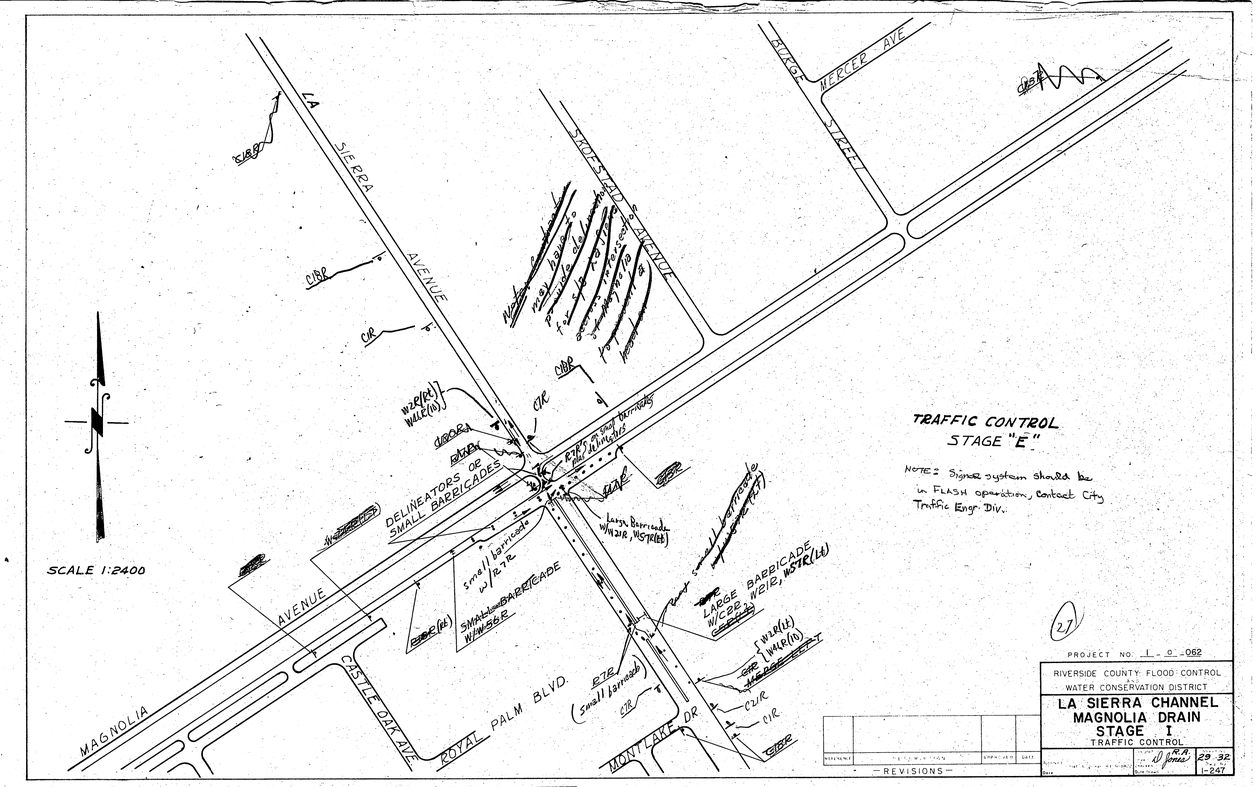

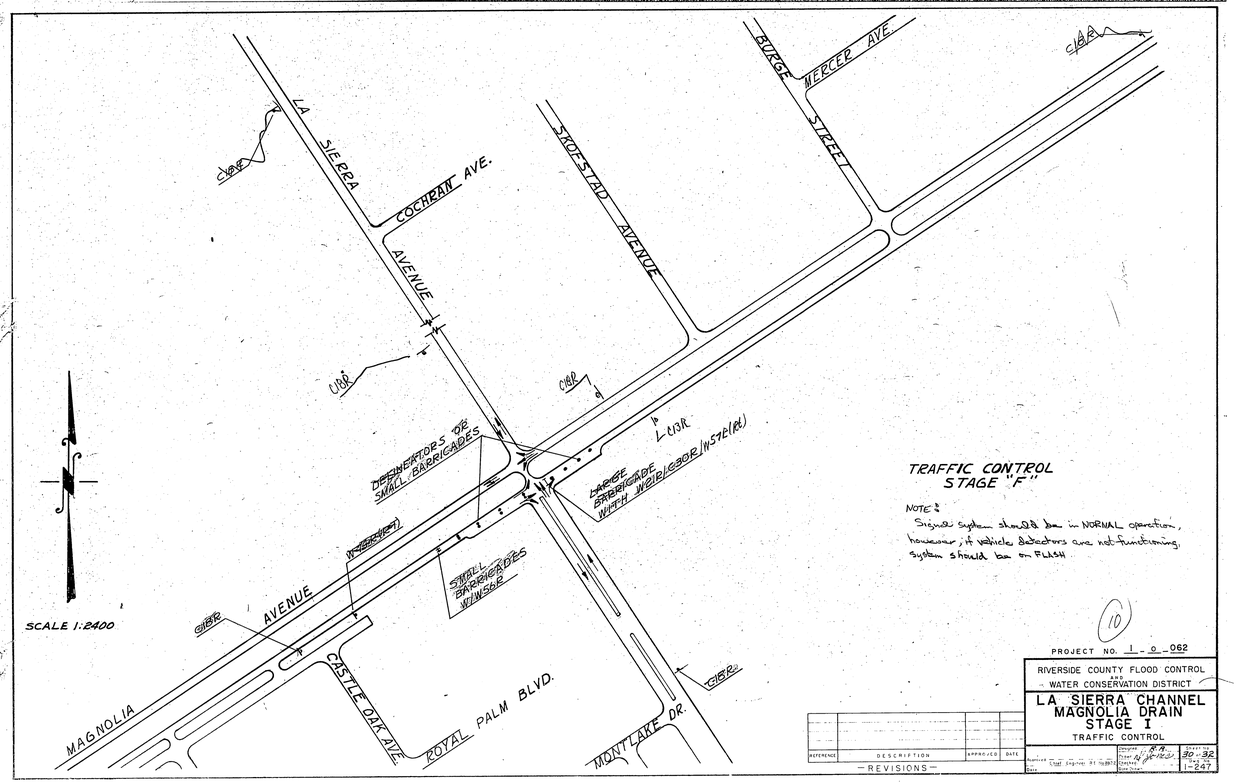

City of Riv. Std. No. 657

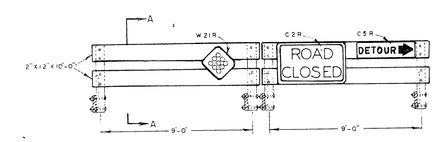

STANDARD BARRICADE WITH TYPICAL DETOUR SIGNS

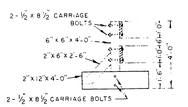

SECTION A-A

NOTE:
1. ALL LUMBER TO BE SELECT STRUCTURAL D.F. S4S.
2. Barricades to be given two coats of signal yellow paint after assembly.
3. Signs, reflectors, and barricades to be furnished and installed by the contractor as directed by the engineer.

PROJECT NO. 1-0-062

Revised Date	RIVERSIDE COUNTY FLOOD CONTROL AND WATER CONSERVATION DISTRICT
	CONSTRUCTION BARRICADES
	APPROVED: CHIEF ENG. R.C.F.C. AND W.C.D. DATE / /
	DR / TRAC / CHECKED / DATE / / / S.H. NO. 31 / DWG. 1-247

City of Riv. No. 658

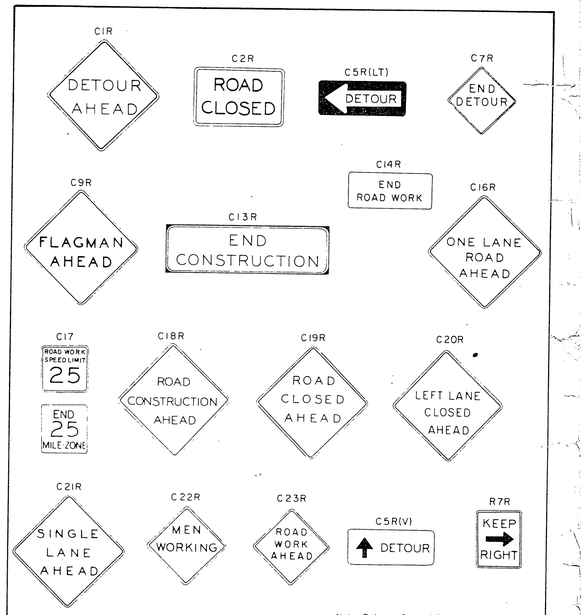

Note: Refer to State of California, Dept. of Public Works, Div. of Highways, Uniform Sign Chart for the Color and Dimensions of the above signs

RECEIVED
SEP 8 1970
DEPT. OF PUBLIC WORKS

D-210

PROJECT NO. 1-0-062

Revised Date	RIVERSIDE COUNTY FLOOD CONTROL AND WATER CONSERVATION DISTRICT
	CONSTRUCTION SIGNS
	APPROVED: CHIEF ENG. R.C.F.C. AND W.C.D. DATE / /
	DR / TRAC / CHECKED / DATE / / / S.H. NO. 32 / DWG. 1-247