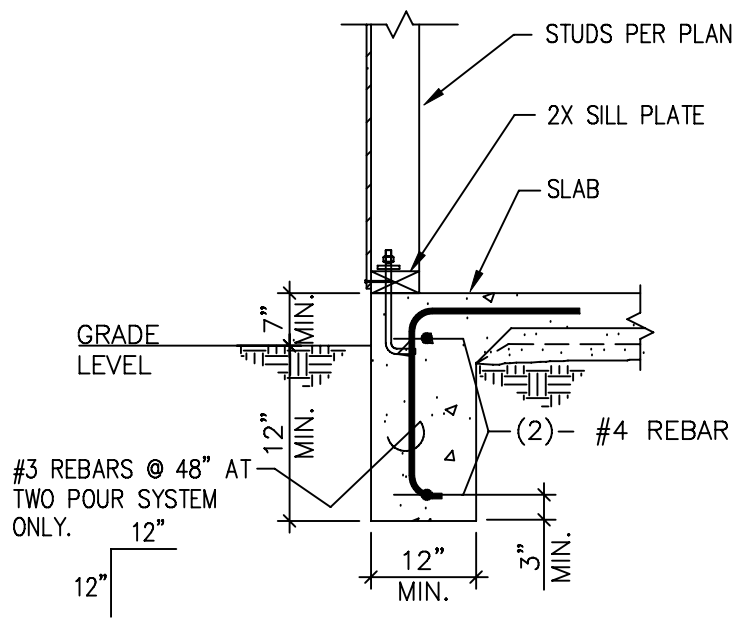

TYPICAL EXTERIOR FOUNDATION A

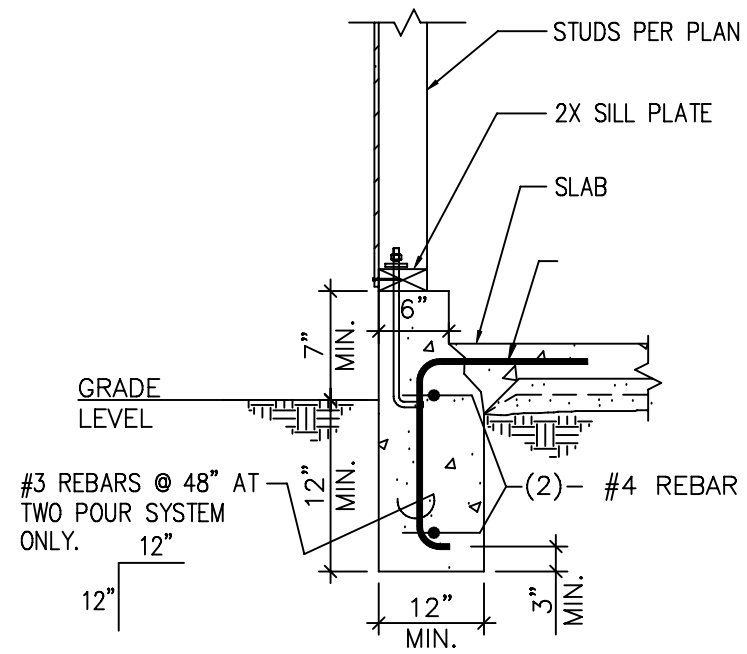

TYPICAL GARAGE FOUNDATION B

FOUNDATION NOTES:

1. MINIMUM COMPRESSIVE STRENGTH OF CONCRETE SHALL NOT BE LESS THAN 3,000 PSI (6 SACK MIX).
2. SILL PLATES SHALL BE PRESSURE TREATED.
3. ANCHOR BOLTS SHALL BE A MINIMUM OF 1/2" DIAMETER WITH 3"X3"X1/4" PLATE WASHERS.
4. ANCHOR BOLTS SHALL BE SPACED NOT MORE THAN 72" O/C AND SHALL BE EMBEDDED AT LEAST 7" INTO CONCRETE.
5. THERE SHALL BE A MINIMUM OF TWO BOLTS PER PIECE OF SILL PLATE WITH ONE BOLT LOCATED NOT MORE THAN 12 INCHES OR LESS THAN 4 INCHES FROM EACH END OF THE PIECE.
6. CONCRETE SLAB SHALL NOT BE LESS THAN 3 1/2 INCHES IN THICKNESS. SLAB SHALL BE PLACED OVER 6–MIL VISQUEEN VAPOR BARRIER OVER 4" THICK BASE OF 1/2" OR LARGER CLEAN AGGREGATE. (RECOMMENDED–BUT NOT REQUIRED– SLAB TO BE REINFORCED WITH 6X6–W10XW10 WELDED WIRE MESH.)
7. EPOXY INSTALLED REBARS OR ANCHOR BOLTS SHALL BE INSTALLED PER ICC GUIDELINES AND SHALL REQUIRE SPECIAL INSPECTION. A CITY BUILDING INSPECTOR CAN PERFORM THE SPECIAL INSPECTION AFTER THE HOLE IS BORED AND CLEANED BUT BEFORE THE EPOXY IS PLACED.
8. DETAILS APPLY TO SINGLE FAMILY RESIDENCES AND GARAGES TO BE BUILT UNDER THE PARAMETERS OF THE 2010 CALIFORNIA RESIDENTIAL CODE.

C

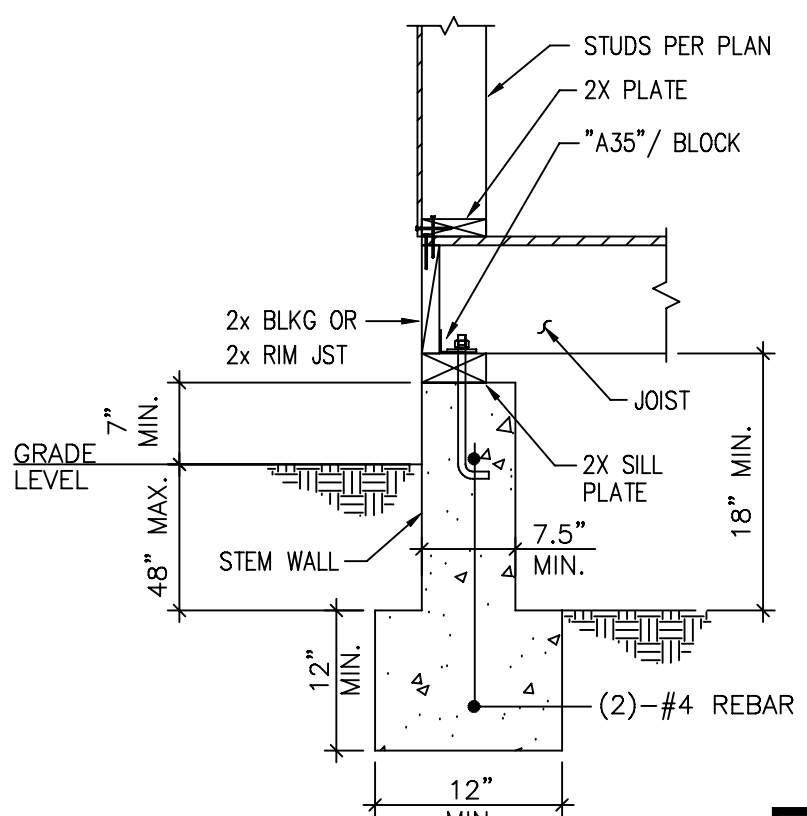

TYPICAL EXTERIOR RAISED FOUNDATION D

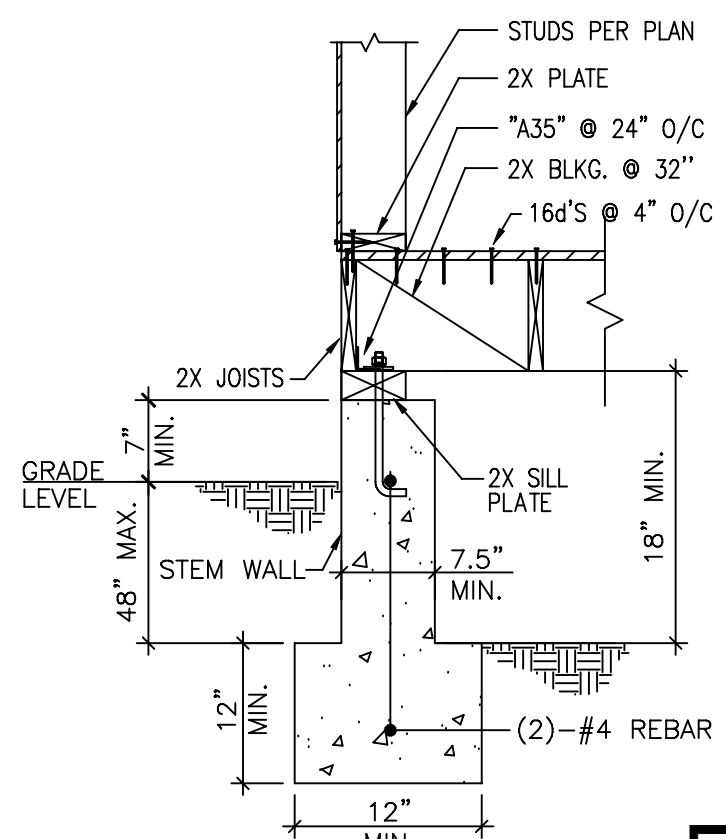

TYPICAL EXTERIOR RAISED FOUNDATION E

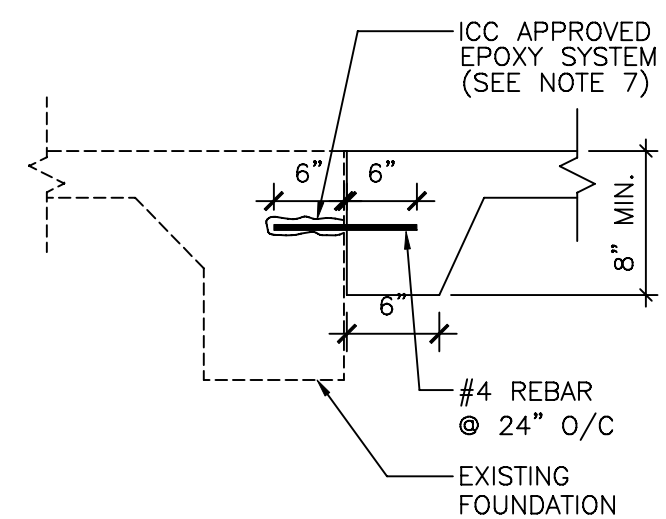

TYPICAL SLAB ANCHORAGE TO EXISTING FOUNDATION F

CITY OF RIVERSIDE

CITY OF RIVERSIDE
BUILDING & SAFETY DIVISION
STANDARD STRUCTURAL DETAILS

SCALE	NONE
BK DRAWN	06/2002 DATE

REV.	DATE	APPR.
1	10/2002	BK
2	01/2008	BK
3	01/2011	BK
4		
5		

FOUNDATION

G/BLDG/ORIGINALS/FOUNDATION DETAILS RSD-1

RSD-1.0

SHEET